Chipsmall Limited consists of a professional team with an average of over 10 year of expertise in the distribution of electronic components. Based in Hongkong, we have already established firm and mutual-benefit business relationships with customers from,Europe,America and south Asia,supplying obsolete and hard-to-find components to meet their specific needs.

With the principle of “Quality Parts,Customers Priority,Honest Operation,and Considerate Service”,our business mainly focus on the distribution of electronic components. Line cards we deal with include Microchip,ALPS,ROHM,Xilinx,Pulse,ON,Everlight and Freescale. Main products comprise IC,Modules,Potentiometer,IC Socket,Relay,Connector.Our parts cover such applications as commercial,industrial, and automotives areas.

We are looking forward to setting up business relationship with you and hope to provide you with the best service and solution. Let us make a better world for our industry!

Contact us

Tel: +86-755-8981 8866 Fax: +86-755-8427 6832
Email & Skype: info@chipsmall.com Web: www.chipsmall.com
Address: A1208, Overseas Decoration Building, #122 Zhenhua RD., Futian, Shenzhen, China

DWG. NO.	PC-11478
ISSUE	REVISIONS

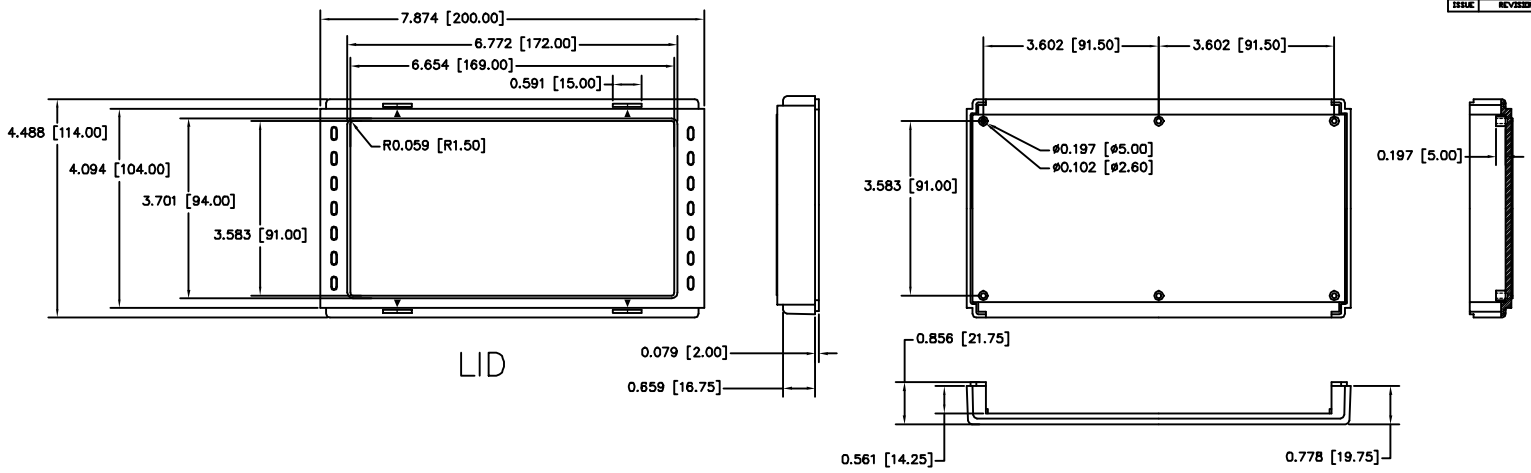

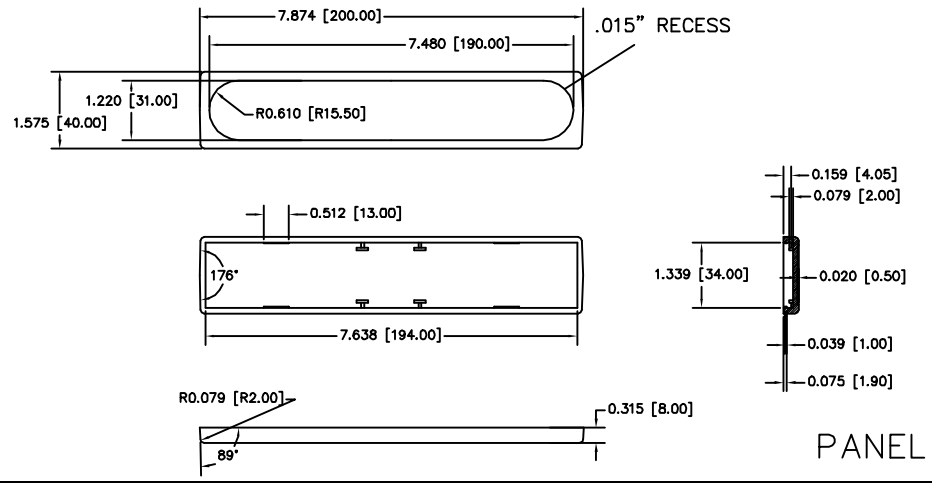

ITEM	REQ'D.	PART NO.	DESCRIPTION

TOLERANCES: ±.030 BETWEEN HOLE CENTERS ±.005 FROM SHOWED EDGE ±.030 FROM A DONT SURFACE ±.063 BETWEEN ASSEMBLED SURFACES UNLESS OTHERWISE SPECIFIED	DRAT. AS NOTED	SCALE	NAME PLASTICASE STYLE I 7.87 X 4.76 X 1.57
	FINISH AS NOTED	BUD	
	DR. RD 10-12-08	BUD INDUSTRIES, INC.	
	CH.	VILLOUGHBY, OHIO	DWG. NO. PC-11478
QTY. USED ON	APP.		

DWG. NO.	PC-11478
ISSUE	REVISIONS

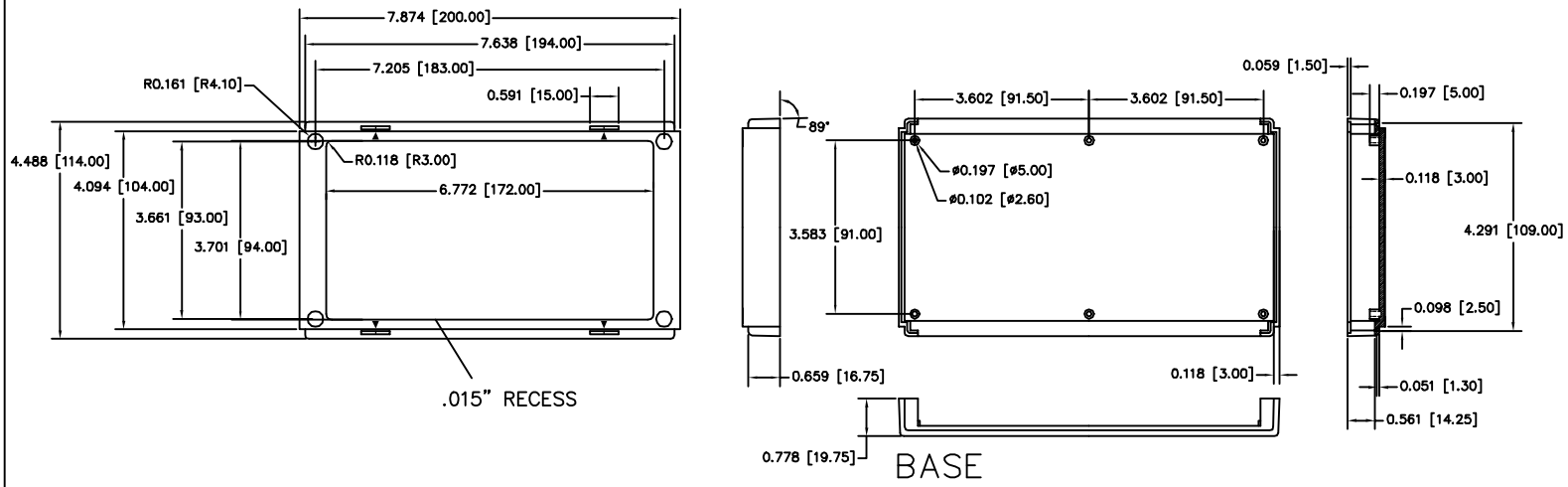

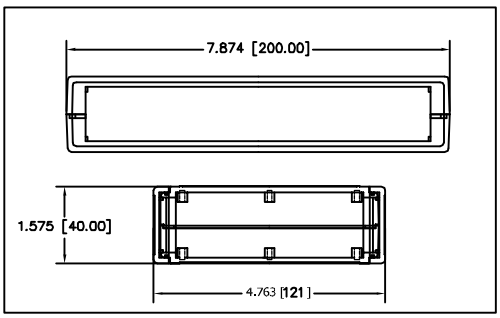

MATERIAL : HIGH IMPACT UL- 94-HB ABS .
COLOR:
LID & BASE ARE MOLDED IN LIGHT GREY COLOR
FRONT & END PANELS
ARE MOLDED IN DARK GREY COLOR
FINISH:
FRONT & END PANELS ARE SMOOTH WITH TEXTURE ONLY IN THE RECESS AREA.
LID & BASE ARE SMOOTH WITH TEXTURE ONLY IN OUTSIDE RAISED AREA.
SIX (6) INTERNAL BOSSES ON BASE & LID ARE
AVAILABLE FOR PCB ASSEMBLY. USE M2.5 OR
#4 STD SHEET METAL SCREWS.
ALL DIMENSIONAL TOLERANCES ARE +/-.015
RUBBER FEET PART NUMBER ——— AVAILABLE AS ACCESSORY

ITEM	REQ'D.	PART NO.	DESCRIPTION

TOLERANCES: ±.030 BETWEEN HOLE CENTERS ±.005 FROM SHOWED EDGE ±.030 FROM A DONT SURFACE ±.063 BETWEEN ASSEMBLED SURFACES UNLESS OTHERWISE SPECIFIED	DRAT. AS NOTED	SCALE	NAME PLASTICASE STYLE I 7.87 X 4.76 X 1.57
	FINISH AS NOTED	BUD	
	DR. RD 10-12-08	BUD INDUSTRIES, INC.	
	CH.	VILLOUGHBY, OHIO	DWG. NO. PC-11478
QTY. USED ON	APP.		