Chipsmall Limited consists of a professional team with an average of over 10 year of expertise in the distribution of electronic components. Based in Hongkong, we have already established firm and mutual-benefit business relationships with customers from,Europe,America and south Asia,supplying obsolete and hard-to-find components to meet their specific needs.

With the principle of “Quality Parts,Customers Priority,Honest Operation,and Considerate Service”,our business mainly focus on the distribution of electronic components. Line cards we deal with include Microchip,ALPS,ROHM,Xilinx,Pulse,ON,Everlight and Freescale. Main products comprise IC,Modules,Potentiometer,IC Socket,Relay,Connector.Our parts cover such applications as commercial,industrial, and automotives areas.

We are looking forward to setting up business relationship with you and hope to provide you with the best service and solution. Let us make a better world for our industry!

Contact us

Tel: +86-755-8981 8866 Fax: +86-755-8427 6832
Email & Skype: info@chipsmall.com Web: www.chipsmall.com
Address: A1208, Overseas Decoration Building, #122 Zhenhua RD., Futian, Shenzhen, China

REVISIONS				
ZONE	REV.	DESCRIPTION	DATE	APPROVED
	X	Outlet Definition		WB
	1	Saftey and Regulatory	2/19/2016	WB
	2	Production Level Spec.	3/21/2016	WB

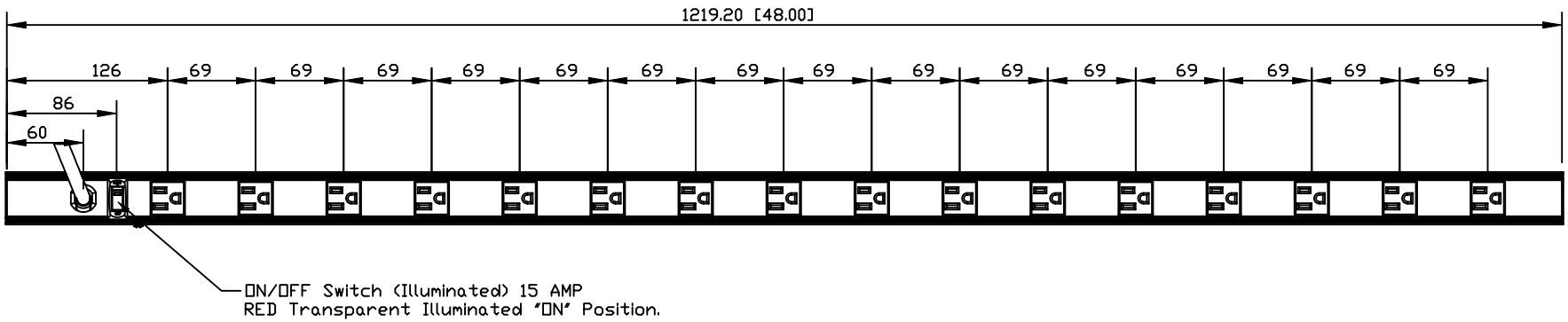

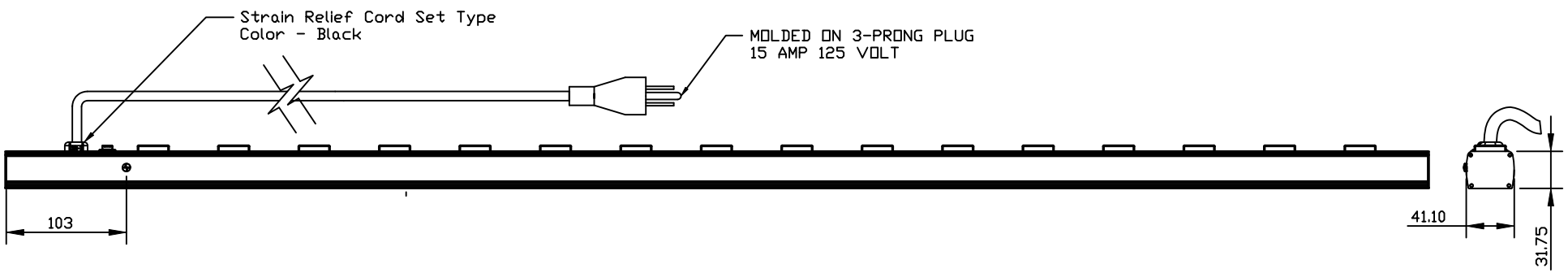

Part Description	Zero U Rack Mount PDU, 16 Outlets, 15A WMP, Circuit Breaker
Delta Part Number	PDU1615-VM
Finish	Powder Coat Black
Saftey	UL/cUL (UL1363)
Cord Length & AWG	15' (14 AWG x 3)
Connector - AC Input	NEMA 5-15P
Connector - AC Output	NEMA 5-15R

DELTA 達電子工業股份有限公司 LTA ELECTRONICS, INC.

THESE DRAWINGS AND SPECIFICATIONS ARE THE PROPERTY OF DELTA ELECTRONICS, INC. AND SHALL NOT BE REPRODUCED OR USED AS THE BASIS FOR THE MANUFACTURE OR SELL OF APPARATUSES OR DEVICES WITHOUT PERMISSION.

DIMENSIONAL TOLERANCES

Drawn:	ID-3D Design
Safety:	
Design:	
Layout:	
Checked:	
IE:	
Approved:	W.Bradshaw
EE. Chk:	
Material:	Aluminum
EE. Apvd:	
Description:	ZERO U VERTICAL MOUNT PDU
Part No.	PDU1615-VM
REV.	2
A2 SIZE	
SHEET 1 OF 1	
ISSUE DATE: 23 MAR 16	
SCALE	
UNIT	MM
USED ON	