Chipsmall Limited consists of a professional team with an average of over 10 year of expertise in the distribution of electronic components. Based in Hongkong, we have already established firm and mutual-benefit business relationships with customers from,Europe,America and south Asia,supplying obsolete and hard-to-find components to meet their specific needs.

With the principle of “Quality Parts,Customers Priority,Honest Operation,and Considerate Service”,our business mainly focus on the distribution of electronic components. Line cards we deal with include Microchip,ALPS,ROHM,Xilinx,Pulse,ON,Everlight and Freescale. Main products comprise IC,Modules,Potentiometer,IC Socket,Relay,Connector.Our parts cover such applications as commercial,industrial, and automotives areas.

We are looking forward to setting up business relationship with you and hope to provide you with the best service and solution. Let us make a better world for our industry!

Contact us

Tel: +86-755-8981 8866 Fax: +86-755-8427 6832
Email & Skype: info@chipsmall.com Web: www.chipsmall.com
Address: A1208, Overseas Decoration Building, #122 Zhenhua RD., Futian, Shenzhen, China

PI74LPT373

Fast CMOS 3.3V 8-Bit Transparent Latch

Product Features

- Compatible with LCX™ and LVT™ families of products
- Supports 5V Tolerant Mixed Signal Mode Operation
  - Input can be 3V or 5V
  - Output can be 3V or connected to 5V bus
- Advanced Low Power CMOS Operation
- Excellent output drive capability:
  Balanced drives (24 mA sink and source)
- Low ground bounce outputs
- Hysteresis on all inputs
- Industrial operating temperature range: –40°C to +85°C
- Packages available:
  - 20-pin 173 mil wide plastic TSSOP (L)
  - 20-pin 150 mil wide plastic QSOP (Q)
  - 20-pin 150 mil wide plastic TQSOP (R)
  - 20-pin 300 mil wide plastic SOIC (S)

Product Description

Pericom Semiconductor's PI74LPT series of logic circuits are produced in the Company's advanced 0.6 micron CMOS technology, achieving industry leading speed grades.

The PI74LPT373 is an 8-bit transparent latch designed with 3-state outputs and is intended for bus oriented applications. When Latch Enable (LE) is HIGH, the flip-flops appear transparent to the data. The data that meets the set-up time when LE is LOW is latched. When $\overline{OE}$ is HIGH, the bus output is in the high impedance state.

The PI74LPT373 can be driven from either 3.3V or 5.0V devices allowing this device to be used as a translator in a mixed 3.3/5.0V system.

Logic Block Diagram

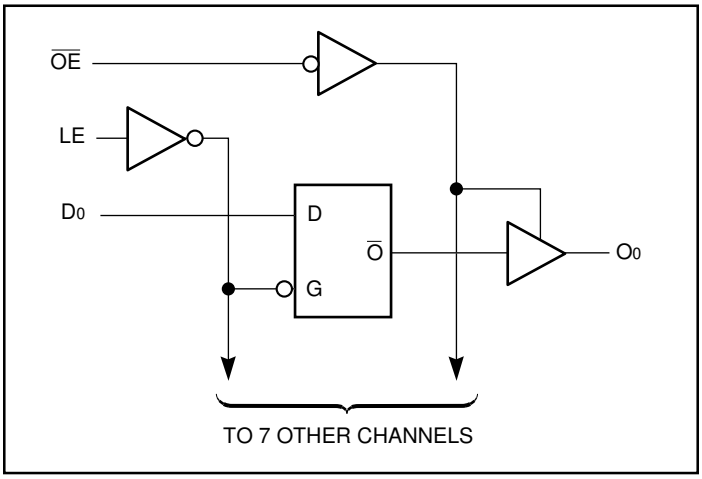

Product Pin Configuration

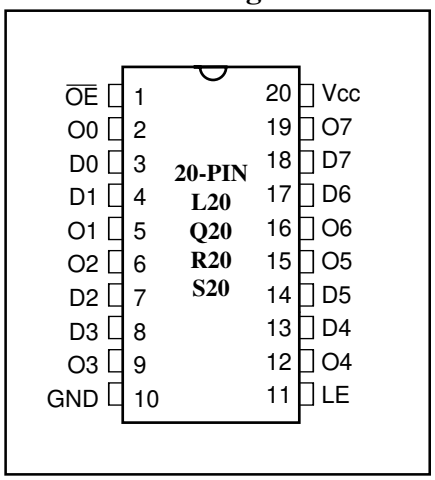

Truth Table[1]

Inputs			Outputs
D_N	LE	$\overline{OE}$	O_N
H	H	L	H
L	H	L	L
X	X	H	Z
X	L	L	O_0

Note:
1. H = High Voltage Level, X = Don't Care,
   L = Low Voltage Level, Z = High Impedance

Product Pin Description

Pin Name	Description
$\overline{OE}$	Output Enable Input (Active LOW)
LE	Latch Enable Input (Active HIGH)
D7-D0	Data Inputs
O7-O0	3-State Outputs
GND	Ground
V_{CC}	Power

PS2060A 01/15/97

Maximum Ratings

(Above which the useful life may be impaired. For user guidelines, not tested.)

Storage Temperature	–55°C to +125°C
Ambient Temperature with Power Applied	–40°C to +85°C
Supply Voltage to Ground Potential (Inputs & Vcc Only)	–0.5V to +7.0V
Supply Voltage to Ground Potential (Outputs & D/O Only)	–0.5V to +7.0V
DC Input Voltage	–0.5V to +7.0V
DC Output Current	120 mA
Power Dissipation	1.0W

Note:
Stresses greater than those listed under MAXIMUM RATINGS may cause permanent damage to the device. This is a stress rating only and functional operation of the device at these or any other conditions above those indicated in the operational sections of this specification is not implied. Exposure to absolute maximum rating conditions for extended periods may affect reliability.

DC Electrical Characteristics (Over the Operating Range, T_A = –40°C to +85°C, V_{CC} = 2.7V to 3.6V)

Parameters	Description	Test Conditions[1]		Min.	Typ[2]	Max.	Units
V_{IH}	Input HIGH Voltage (Input pins)	Guaranteed Logic HIGH Level		2.2	—	5.5	V
	Input HIGH Voltage (I/O pins)			2.0	—	5.5	V
V_{IL}	Input LOW Voltage (Input and I/O pins)	Guaranteed Logic LOW Level		–0.5	—	0.8	V
I_{IH}	Input HIGH Current (Input pins)	V_{CC} = Max.	V_{IN} = 5.5V	—	—	±1	µA
	Input HIGH Current (I/O pins)	V_{CC} = Max.	V_{IN} = V_{CC}	—	—	±1	µA
I_{IL}	Input LOW Current (Input pins)	V_{CC} = Max.	V_{IN} = GND	—	—	±1	µA
	Input LOW Current (I/O pins)	V_{CC} = Max.	V_{IN} = GND	—	—	±1	µA
I_{OZH}	High Impedance Output Current	V_{CC} = Max.	V_{OUT} = 5.5V	—	—	±1	µA
I_{OZL}	(3-State Output pins)	V_{CC} = Max.	V_{OUT} = GND	—	—	±1	µA
V_{IK}	Clamp Diode Voltage	V_{CC} = Min., I_{IN} = –18 mA		—	–0.7	–1.2	V
I_{ODH}	Output HIGH Current	V_{CC} = 3.3V, V_{IN} = V_{IH} or V_{IL}, V_O = 1.5V[3]		–36	–60	–110	mA
I_{ODL}	Output LOW Current	V_{CC} = 3.3V, V_{IN} = V_{IH} or V_{IL}, V_O = 1.5V[3]		50	90	200	mA
V_{OH}	Output HIGH Voltage	V_{CC} = Min.	I_{OH} = –0.1 mA	Vcc-0.2	—	—	V
		V_{IN} = V_{IH} or V_{IL}	I_{OH} = –3 mA	2.4	3.0	—	V
		V_{CC} = 3.0V,	I_{OH} = –8 mA	2.4[5]	3.0	—	V
		V_{IN} = V_{IH} or V_{IL}	I_{OH} = –24 mA	2.0	—	—	
V_{OL}	Output LOW Voltage	V_{CC} = Min.	I_{OL} = 0.1 mA	—	—	0.2	V
		V_{IN} = V_{IH} or V_{IL}	I_{OL} = 16 mA	—	0.2	0.4	V
			I_{OL} = 24 mA	—	0.3	0.5	V
I_{OS}	Short Circuit Current[4]	V_{CC} = Max.[3], V_{OUT} = GND		–60	–85	–240	mA
I_{OFF}	Power Down Disable	V_{CC} = 0V, V_{IN} or V_{OUT} ≤ 4.5V		—	—	±100	µA
V_H	Input Hysteresis			—	150	—	mV

Notes:
1. For Max. or Min. conditions, use appropriate value specified under Electrical Characteristics for the applicable device type.
2. Typical values are at Vcc = 3.3V, +25°C ambient and maximum loading.
3. Not more than one output should be shorted at one time. Duration of the test should not exceed one second.
4. This parameter is guaranteed but not tested.
5. V_{OH} = V_{CC} – 0.6V at rated current.

Capacitance (T_A = 25°C, f = 1 MHz)

Parameters[1]	Description	Test Conditions	Typ	Max.	Units
C_{IN}	Input Capacitance	V_{IN} = 0V	4.5	6	pF
C_{OUT}	Output Capacitance	V_{OUT} = 0V	5.5	8	pF

Note:
1. This parameter is determined by device characterization but is not production tested.

Power Supply Characteristics

Parameters	Description	Test Conditions[1]		Min.	Typ[2]	Max.	Units
I_{CC}	Quiescent Power Supply Current	V_{CC} = Max.	V_{IN} = GND or V_{CC}		0.1	10	µA
ΔI_{CC}	Quiescent Power Supply Current TTL Inputs HIGH	V_{CC} = Max.	V_{IN} = V_{CC} – 0.6V[3]		2.0	30	µA
I_{CCD}	Dynamic Power Supply[4]	V_{CC} = Max., Outputs Open $\overline{OE}$ = GND One Bit Toggling 50% Duty Cycle	V_{IN} = V_{CC} V_{IN} = GND		50	75	µA/ MHz
I_C	Total Power Supply Current[6]	V_{CC} = Max., Outputs Open f_I = 10 MHz 50% Duty Cycle $\overline{OE}$ = GND One Bit Toggling	V_{IN} = V_{CC} – 0.6V V_{IN} = GND		0.6	2.3	mA
		V_{CC} = Max., Outputs Open f_I = 2.5 MHz 50% Duty Cycle $\overline{OE}$ = GND 8 Bits Toggling	V_{IN} = V_{CC} – 0.6V V_{IN} = GND		2.1	4.7[5]	

Notes:
1. For conditions shown as Max. or Min., use appropriate value specified under Electrical Characteristics for the applicable device.
2. Typical values are at Vcc = 3.3V, +25°C ambient.
3. Per TTL driven input; all other inputs at Vcc or GND.
4. This parameter is not directly testable, but is derived for use in Total Power Supply Calculations.
5. Values for these conditions are examples of the Icc formula. These limits are guaranteed but not tested.
6. $I_C = I_{QUIESCENT} + I_{INPUTS} + I_{DYNAMIC}$
   $I_C = I_{CC} + \Delta I_{CC} D_H N_T + I_{CCD} (f_{CP}/2 + f_I N_I)$
   I_{CC} = Quiescent Current (I_{CCL}, I_{CCH} and I_{CCZ})
   ΔI_{CC} = Power Supply Current for a TTL High Input
   D_H = Duty Cycle for TTL Inputs High
   N_T = Number of TTL Inputs at D_H
   I_{CCD} = Dynamic Current Caused by an Input Transition Pair (HLH or LHL)
   f_{CP} = Clock Frequency for Register Devices (Zero for Non-Register Devices)
   N_{CP} = Number of Clock Inputs at f_{CP}
   f_I = Input Frequency
   N_I = Number of Inputs at f_I
   All currents are in milliamps and all frequencies are in megahertz.

Switching Characteristics over Operating Range[1]

Parameters	Description	Conditions[2]	LPT373 Com. Min[3]	LPT373 Com. Max	LPT373A Com. Min[3]	LPT373A Com. Max	LPT373C Com. Min[3]	LPT373C Com. Max	Unit
t_{PLH} t_{PHL}	Propagation Delay Dx to Ox	C_L = 50 pF R_L = 500 Ω	1.5	8.0	1.5	5.2	1.5	4.2	ns
t_{PLH} t_{PHL}	Propagation Delay LE to Ox		2.0	8.5	2.0	8.5	2.0	5.5	ns
t_{PZH} t_{PZL}	Output Enable Time $\overline{OE}$ to Ox		1.5	8.5	1.5	6.5	1.5	5.5	ns
t_{PHZ} t_{PLZ}	Output Disable Time[4] $\overline{OE}$ to Ox		1.5	7.5	1.5	5.5	1.5	5.0	ns
t_{SU}	Setup Time HIGH or LOW, Dx to LE		2.0		2.0		2.0		ns
t_H	Hold Time HIGH or LOW, Dx to LE		1.5		1.5		1.5		ns
t_W	LE Pulse Width HIGH[4]		6.0		5.0		5.0		ns
$t_{SK}(o)$	Output Skew[5]			0.5		0.5		0.5	ns

Notes:
1. Propagation Delays and Enable/Disable times are with Vcc = 3.3V ±0.3V, normal range. For Vcc = 2.7V, extended range, all Propagation Delays and Enable/Disable times should be degraded by 20%.
2. See test circuit and wave forms.
3. Minimum limits are guaranteed but not tested on Propagation Delays.
4. This parameter is guaranteed but not production tested.
5. Skew between any two outputs, of the same package, switching in the same direction. This parameter is guaranteed by design.