Chipsmall Limited consists of a professional team with an average of over 10 year of expertise in the distribution of electronic components. Based in Hongkong, we have already established firm and mutual-benefit business relationships with customers from,Europe,America and south Asia,supplying obsolete and hard-to-find components to meet their specific needs.

With the principle of “Quality Parts,Customers Priority,Honest Operation,and Considerate Service”,our business mainly focus on the distribution of electronic components. Line cards we deal with include Microchip,ALPS,ROHM,Xilinx,Pulse,ON,Everlight and Freescale. Main products comprise IC,Modules,Potentiometer,IC Socket,Relay,Connector.Our parts cover such applications as commercial,industrial, and automotives areas.

We are looking forward to setting up business relationship with you and hope to provide you with the best service and solution. Let us make a better world for our industry!

# Contact us

Tel: +86-755-8981 8866 Fax: +86-755-8427 6832
Email & Skype: info@chipsmall.com Web: www.chipsmall.com
Address: A1208, Overseas Decoration Building, #122 Zhenhua RD., Futian, Shenzhen, China

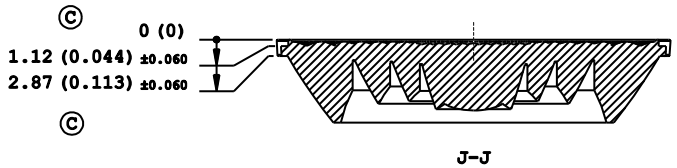


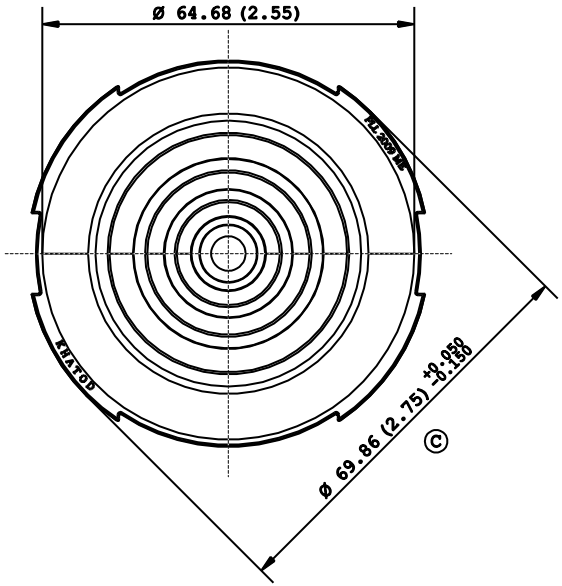


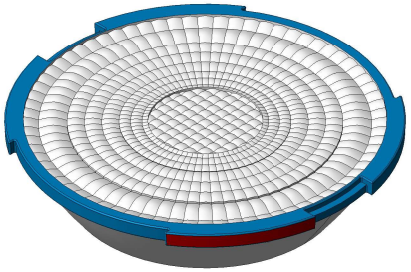

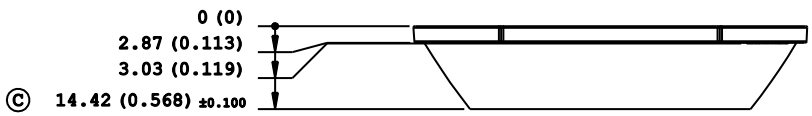


Gate area: see note

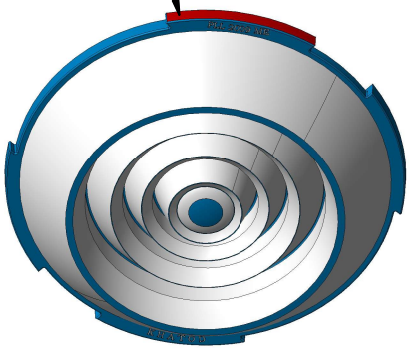

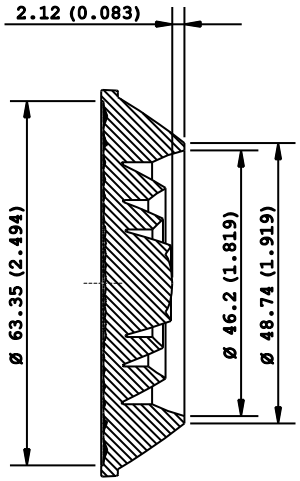


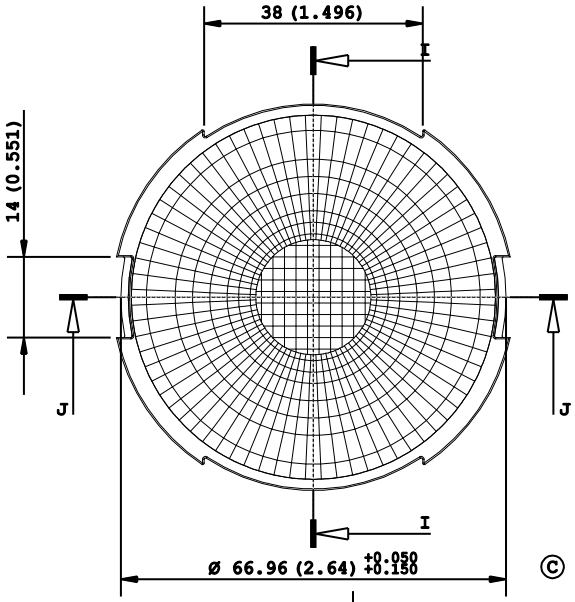


Note:
- Dimensions in inches into brackets
- For missing dimensions see 3D file
- WHITE surfaces: mirror polished
- BLUE surfaces: embossed 25/27 VDI
- RED surface: available area for gate material.
  Sink mark injection will be present
- Ⓒ: Quality Control Dimension (QCD)

'' Project and design owned by Khatod OPTOELECTRONIC s. r. l.''
The technical solutions adopted in this design are Khatod intellectual property, they cannot be reproduced and trasmitted to third parties without our prior written permission.
Unauthorized disclosure of confidential proprietary information will be prosecuted by law.

| | | | |
|---|---|---|---|
| DESCRIPTION : Fresnel Lens | DESIGNER : LM/LS | | PROJECTS : Bassett |
| CODE : PLL 2009 ME | CHECKED : LM | CONTROLLED: LS | DATA : 05/12/2016 |
| KHATOD<br>Via Alessandrina,25<br>Cusano Milanino<br>MILANO<br>ITALIA<br>WWW.KHATOD.COM | All Dimensions in mm<br>General Tolerances +/-0.20 mm | HEAT TREATMENT: No One | MATERIAL: Pmma |
| | | SCALE : 1 : 1 | SHEET : 1 of 1 |