Chipsmall Limited consists of a professional team with an average of over 10 year of expertise in the distribution of electronic components. Based in Hongkong, we have already established firm and mutual-benefit business relationships with customers from,Europe,America and south Asia,supplying obsolete and hard-to-find components to meet their specific needs.

With the principle of “Quality Parts,Customers Priority,Honest Operation,and Considerate Service”,our business mainly focus on the distribution of electronic components. Line cards we deal with include Microchip,ALPS,ROHM,Xilinx,Pulse,ON,Everlight and Freescale. Main products comprise IC,Modules,Potentiometer,IC Socket,Relay,Connector.Our parts cover such applications as commercial,industrial, and automotives areas.

We are looking forward to setting up business relationship with you and hope to provide you with the best service and solution. Let us make a better world for our industry!

Contact us

Tel: +86-755-8981 8866 Fax: +86-755-8427 6832
Email & Skype: info@chipsmall.com Web: www.chipsmall.com
Address: A1208, Overseas Decoration Building, #122 Zhenhua RD., Futian, Shenzhen, China

版数 REV.	年月日 DATE	DCN NO.	変更内容 DESCRIPTION	製図 DR.	担当 CHK.	査閲 APPD.	承認 APPD.

図面番号(DRAWING NO.) SJ101417

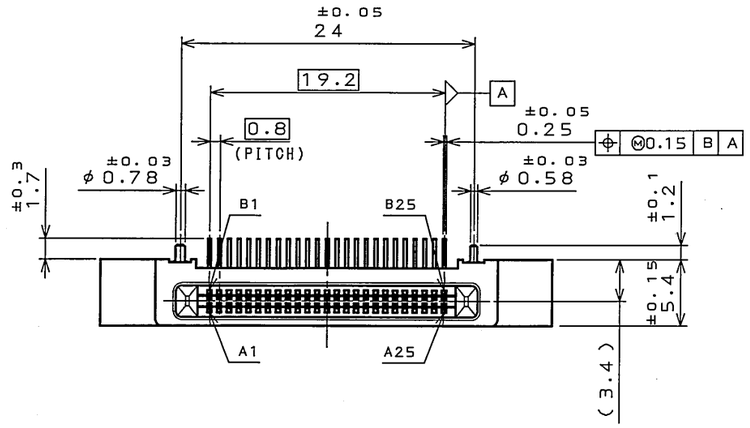

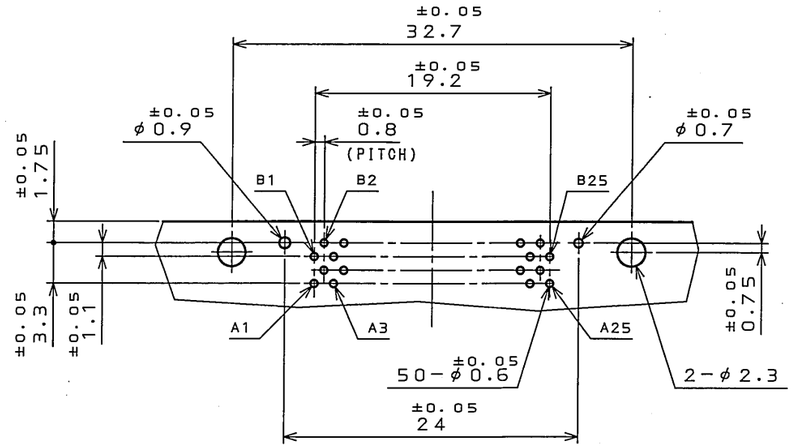

TABLE1.CONTACT FINISH

CONTACT AREA	TERMINAL AREA
GOLD(0.1μmMIN) OVER NICKEL	TIN OVER NICKEL

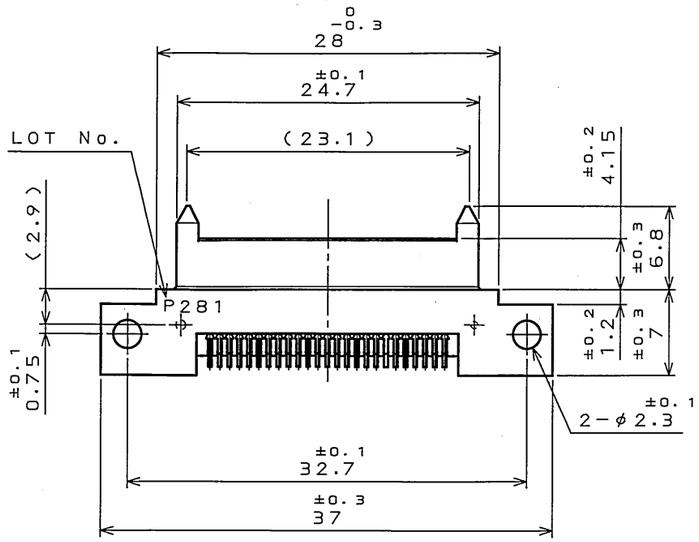

APPLICABLE P.C.B. DIMENSION(REF.)

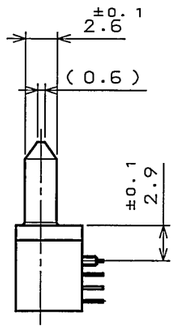

PM1M050H1A

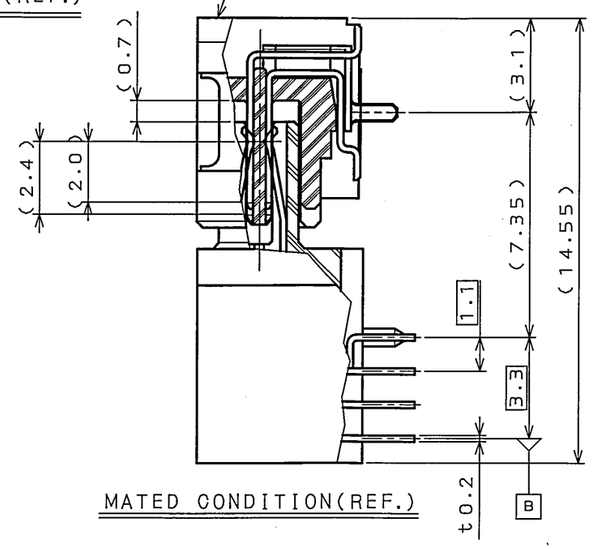

MATED CONDITION(REF.)

符号 NO.	名称 DESCRIPTION	個数 QTY.	材料 MATERIAL	仕上 FINISH	備考 REMARKS
2	INSULATOR	1	GLASS FILLED LCP	――	BLACK:UL94 V-0
1	CONTACT	50	COPPER ALLOY	TABLE1	

仕様書(SPECIFICATION)

第1版(ORIGINAL DATE) 1.Jul.2004

製図 DR.

担当 CHK. T.MORITAKE

査閲 APPD. K. Kawaki

承認 APPD. S. Kashiwagi

一般公差(GENERAL TOLERANCE)

寸法(DIMENSION)	角度(ANGLES)
. ±0.8	X° ±
.X ±0.4	X°X' ±
.XX ±0.1	
.XXX ±	

尺度(SCALE) 2:1

シリーズ(SERIES) PM1

名称(TITLE) PM1F050N1AE

質量(MASS)

日本航空電子工業株式会社
JAPAN AVIATION ELECTRONICS INDUSTRY, LTD.

図面番号(DRAWING NO.) SJ101417

版数(REV.) 1

SIZE A3

JAE-CONNECTOR.COM
Reference only

LEAD FREE この製品は鉛フリー品です

JAE CONNECTOR DIV. PROPRIETARY.
COPYRIGHT (C) 2004, JAPAN AVIATION ELECTRONICS INDUSTRY, LTD.

DOF-0-212E(03.08)

0 10 20 30 40 50 60 70 80 90 100