Chipsmall Limited consists of a professional team with an average of over 10 year of expertise in the distribution of electronic components. Based in Hongkong, we have already established firm and mutual-benefit business relationships with customers from,Europe,America and south Asia,supplying obsolete and hard-to-find components to meet their specific needs.

With the principle of “Quality Parts,Customers Priority,Honest Operation,and Considerate Service”,our business mainly focus on the distribution of electronic components. Line cards we deal with include Microchip,ALPS,ROHM,Xilinx,Pulse,ON,Everlight and Freescale. Main products comprise IC,Modules,Potentiometer,IC Socket,Relay,Connector.Our parts cover such applications as commercial,industrial, and automotives areas.

We are looking forward to setting up business relationship with you and hope to provide you with the best service and solution. Let us make a better world for our industry!

Contact us

Tel: +86-755-8981 8866 Fax: +86-755-8427 6832
Email & Skype: info@chipsmall.com Web: www.chipsmall.com
Address: A1208, Overseas Decoration Building, #122 Zhenhua RD., Futian, Shenzhen, China

版数 REV.	年月日 DATE	DCN NO.	変更内容 DESCRIPTION	製図 DR.	担当 CHK.	査閲 APPD.	承認 APPD.
2	25.Jan.2008	064915	REVISED TAPE WIDTH		T.MORITAKE	——	Y.YAHIRO
3	9.Jul.2008	066155	CORRECT AN ERROR		T.MORITAKE	——	Y.YAHIRO

図面番号(DRAWING NO.) SJ108096

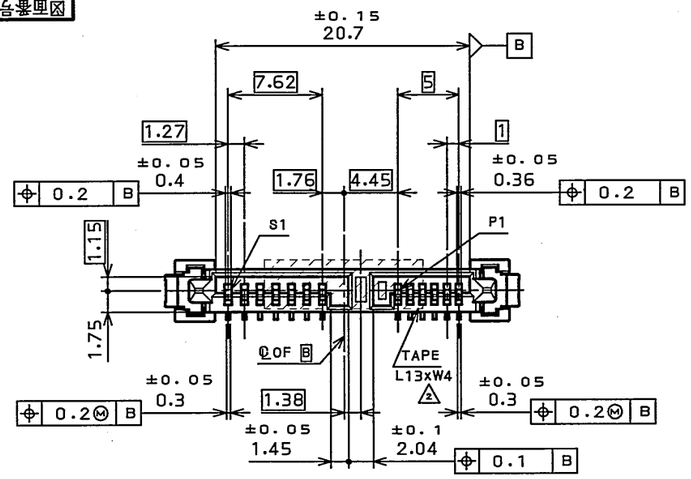

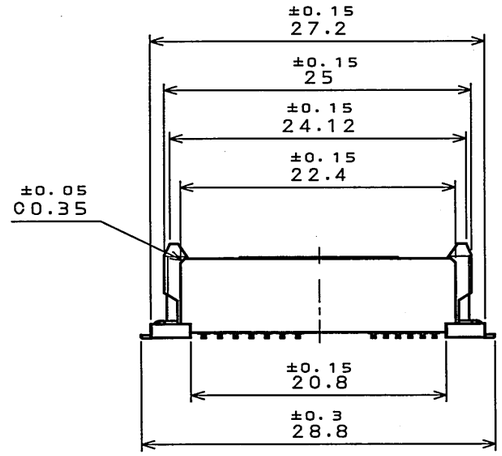

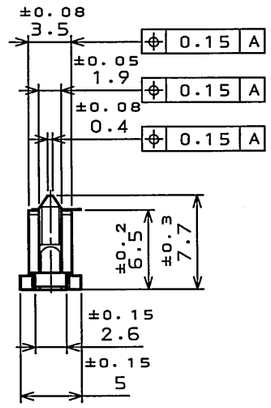

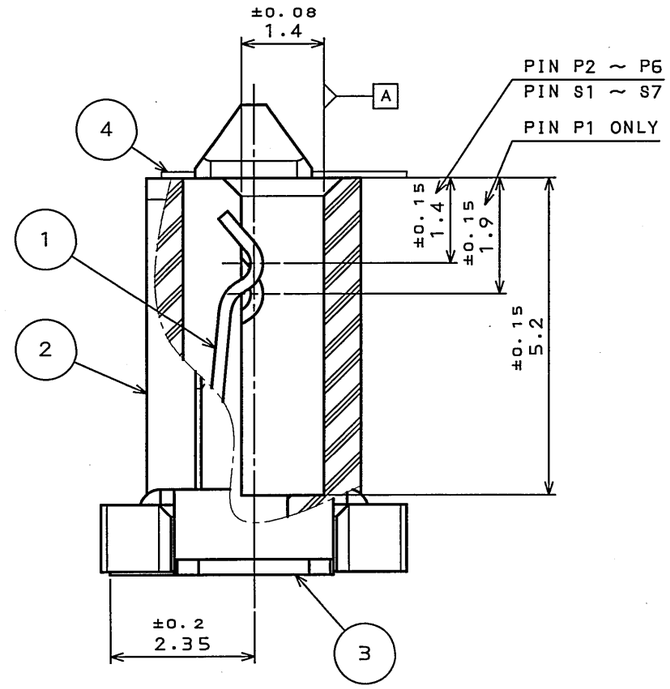

NOTE1.PRODUCTION LOT NUMBER AS INDICATED.

(EX.) 0 7 2 1 1
- DAY OF WEEK(SUNDAY:1)
- WEEK(YEAR OF WEEK:01~**)
- YEAR(END TWO NUMBERS)

2.COPLANARITY:0.1 MAX.

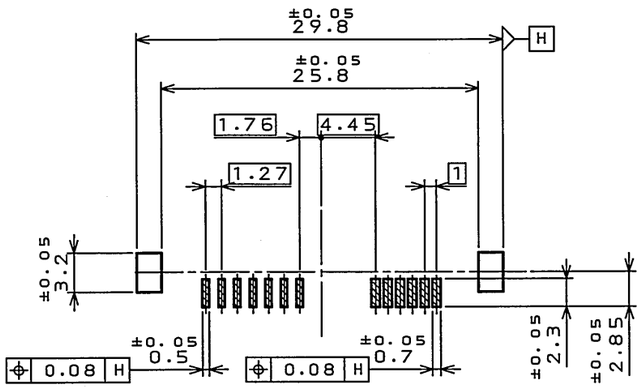

③ APPLICABLE FPC DIMENSION(REF.)
適合FPC寸法(参考)

符号 NO.	名称 DESCRIPTION	個数 QTY.	材料 MATERIAL	仕上 FINISH	備考 REMARKS
4	TAPE	1	POLYIMIDE	——	
3	HOLD DOWN	2	COPPER ALLOY	TIN OVER NICKEL	
2	INSULATOR	1	GLASS FILLED LCP		UL94V-0 COLOR:BLACK
1	CONTACT	13	COPPER ALLOY	CONTACT AREA:Au0.3μmm MIN OVER NI TERMINAL:TIN PLATING	

仕様書(SPECIFICATION)

第1版(ORIGINAL DATE) 12.Dec.2007

一般公差(GENERAL TOLERANCE)

寸法(DIMENSION)	角度(ANGLES)
. ±0.8	X° ±
.X ±0.4	X°X' ±
.XX ±0.1	
.XXX ±	

製図 DR.	Y.F.LIN
担当 CHK.	T.MORITAKE
査閲 APPD.	——
承認 APPD.	Y.YAHIRO

尺度(SCALE) 5:1
シリーズ(SERIES) PM2
名称(TITLE) PM2R013VQ2
質量(MASS)

日本航空電子工業株式会社
JAPAN AVIATION ELECTRONICS INDUSTRY, LTD.

図面番号(DRAWING NO.) SJ108096
版数(REV.) 3
SIZE A3

JAE-CONNECTOR.COM
Reference Only

LEAD FREE この製品は鉛フリー品です

JAE CONNECTOR DIV. PROPRIETARY.
COPYRIGHT (C) 2007, JAPAN AVIATION ELECTRONICS INDUSTRY, LTD.

DOF-0-212F(05.08)

0 10 20 30 40 50 60 70 80 90 100