Chipsmall Limited consists of a professional team with an average of over 10 year of expertise in the distribution of electronic components. Based in Hongkong, we have already established firm and mutual-benefit business relationships with customers from,Europe,America and south Asia,supplying obsolete and hard-to-find components to meet their specific needs.

With the principle of “Quality Parts,Customers Priority,Honest Operation,and Considerate Service”,our business mainly focus on the distribution of electronic components. Line cards we deal with include Microchip,ALPS,ROHM,Xilinx,Pulse,ON,Everlight and Freescale. Main products comprise IC,Modules,Potentiometer,IC Socket,Relay,Connector.Our parts cover such applications as commercial,industrial, and automotives areas.

We are looking forward to setting up business relationship with you and hope to provide you with the best service and solution. Let us make a better world for our industry!

Contact us

Tel: +86-755-8981 8866 Fax: +86-755-8427 6832
Email & Skype: info@chipsmall.com Web: www.chipsmall.com
Address: A1208, Overseas Decoration Building, #122 Zhenhua RD., Futian, Shenzhen, China

THIS COPY IS PROVIDED ON A RESTRICTED BASIS AND IS NOT TO BE USED IN ANY WAY DETRIMENTAL TO THE INTERESTS OF PANDUIT CORP.

PANDUIT PART NUMBER	USE WITH CABLE TIE	DIMENSIONS			COLOR	WEIGHT grams/100pcs
		"D"	"E" (REF)	"G"		
PMA-065-_0	M, I, S	15.3	7.6	16.5	BLACK	44.6

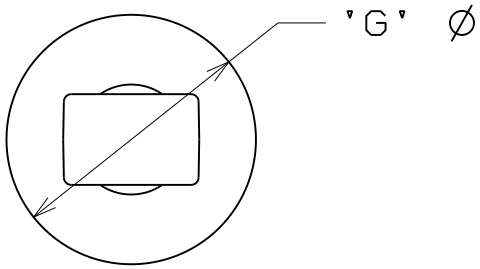

NOTES:
1. SEE CURRENT PRICE SHEET FOR PART NUMBER SUFFIX DESIGNATION FOR PACKAGE SIZE.
2. (*) DIMENSIONAL VARIANCE IS POSSIBLE DUE TO MOLDING PROCESS RELATED SINK MARKS.
3. APPLICATION SPECIFICATION:
   A. NOMINAL HOLE DIAMETER: 6.4 mm
   B. NOMINAL PANEL THICKNESS: 2.0 mm

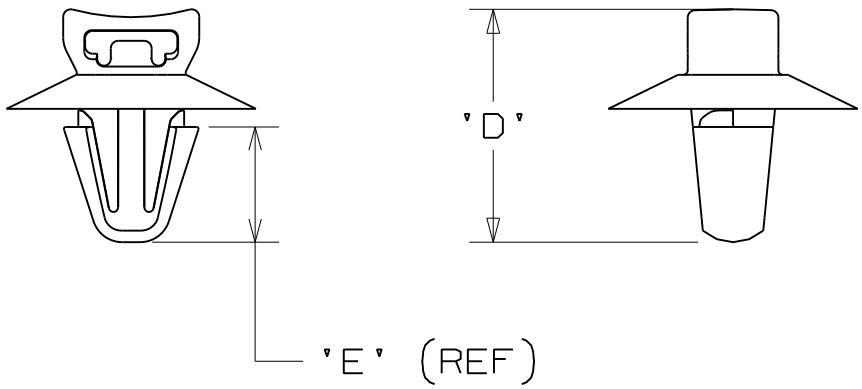

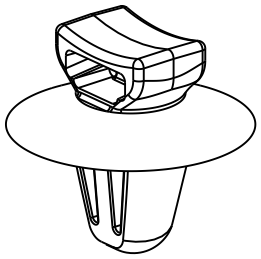

CAD FILENAME/LAYERS: G03487CA_DC_GB3487DD_04B

PANDUIT CORP. TINLEY PARK, ILLINOIS

PMA-065-_0
ARROW HEAD PUSH MOUNT

UNLESS OTHERWISE SPECIFIED, ALL DIMENSIONS ARE GIVEN IN METRIC
TOLERANCE: ±0.5MM

REV	DATE	BY	CHK	DESCRIPTION	ECN - R		CUST	SUP
04B	7/25/08	ARHA		CHANGED DIMS, TABLES, NOTES, REV FORMAT.	GB3487DD	04B		
R	5/23/08	CR-MBA	RRP	INITIAL RELEASE	GB3487DD	R		

DRAWN BY: CR-MBA
DATE: 5/23/08
CHK'D:
MAT'L: NYLON 6/6 WEATHER RESISTANT
SCALE: 2:1 UNLESS NOTED
DRAWING NO.: GB3487DD
DWG SIZE: A