Chipsmall Limited consists of a professional team with an average of over 10 year of expertise in the distribution of electronic components. Based in Hongkong, we have already established firm and mutual-benefit business relationships with customers from,Europe,America and south Asia,supplying obsolete and hard-to-find components to meet their specific needs.

With the principle of “Quality Parts,Customers Priority,Honest Operation,and Considerate Service”,our business mainly focus on the distribution of electronic components. Line cards we deal with include Microchip,ALPS,ROHM,Xilinx,Pulse,ON,Everlight and Freescale. Main products comprise IC,Modules,Potentiometer,IC Socket,Relay,Connector.Our parts cover such applications as commercial,industrial, and automotives areas.

We are looking forward to setting up business relationship with you and hope to provide you with the best service and solution. Let us make a better world for our industry!

Contact us

Tel: +86-755-8981 8866 Fax: +86-755-8427 6832
Email & Skype: info@chipsmall.com Web: www.chipsmall.com
Address: A1208, Overseas Decoration Building, #122 Zhenhua RD., Futian, Shenzhen, China

Wireless Components

Mixer

PMB 2335 Version 1.1

Specification March 2000

preliminary

Revision History: Current Version: 03.00		
Previous Version:Data Sheet		
Page (in previous Version)	Page (in current Version)	Subjects (major changes since last revision)

ABM®, AOP®, ARCOFI®, ARCOFI®-BA, ARCOFI®-SP, DigiTape®, EPIC®-1, EPIC®-S, ELIC®, FALC®54, FALC®56, FALC®-E1, FALC®-LH, IDEC®, IOM®, IOM®-1, IOM®-2, IPAT®-2, ISAC®-P, ISAC®-S, ISAC®-S TE, ISAC®-P TE, ITAC®, IWE®, MUSAC®-A, OCTAT®-P, QUAT®-S, SICAT®, SICOFI®, SICOFI®-2, SICOFI®-4, SICOFI®-4µC, SLICOFI® are registered trademarks of Infineon Technologies AG.

ACE™, ASM™, ASP™, POTSWIRE™, QuadFALC™, SCOUT™ are trademarks of Infineon Technologies AG.

Edition 03.99
Published by Infineon Technologies AG i. Gr.,
SC,
Balanstraße 73,
81541 München
© Infineon Technologies AG i. Gr. 15.03.00.
All Rights Reserved.

Attention please!

As far as patents or other rights of third parties are concerned, liability is only assumed for components, not for applications, processes and circuits implemented within components or assemblies.

The information describes the type of component and shall not be considered as assured characteristics.

Terms of delivery and rights to change design reserved.

Due to technical requirements components may contain dangerous substances. For information on the types in question please contact your nearest Infineon Technologies Office.

Infineon Technologies AG is an approved CECC manufacturer.

Packing

Please use the recycling operators known to you. We can also help you – get in touch with your nearest sales office. By agreement we will take packing material back, if it is sorted. You must bear the costs of transport.

For packing material that is returned to us unsorted or which we are not obliged to accept, we shall have to invoice you for any costs incurred.

Components used in life-support devices or systems must be expressly authorized for such purpose!

Critical components[1] of the Infineon Technologies AG, may only be used in life-support devices or systems[2] with the express written approval of the Infineon Technologies AG.

1 A critical component is a component used in a life-support device or system whose failure can reasonably be expected to cause the failure of that life-support device or system, or to affect its safety or effectiveness of that device or system.

2 Life support devices or systems are intended (a) to be implanted in the human body, or (b) to support and/or maintain and sustain human life. If they fail, it is reasonable to assume that the health of the user may be endangered.

Productinfo

General Description

The mixer used in this design is a general purpose up-/downconversion gilbert cell mixer. An amplified and filtered RF signal enters the IC via the pins MI/MIX. Using an externally supplied local oscillator at LO/LOX a converted output signal is created at the open collector output pins MO/MOX, which have to be connected to an external voltage supply.

Package

P-TSSOP-10-1

Features

- B6HF bipolar technology, 25GHz f_T
- Gilbert cell mixer
- Reduced external components
- Mixer current adjustable with external resistors
- 1.6 mA current consumption typical (no external resistors used)
- Excellent port isolation
- Low noise
- Low spurious signal content
- Power on pin
- Frequency range up to 3.0 GHz
- Supply voltage 2.7 - 4.5V
- -40°C to +85°C operational temperature range

Application

- Cellular radio mixer
- Cordless telephone mixer
- UHF Transceiver
- RF data links
- RF/VHF/UHF frequency conversion

Ordering Information

Type	Ordering Code	Package
PMB 2335		P-TSSOP-10-1

1 Table of Contents

2 Product Description 2-1
2.1 Overview 2-2
2.2 Features 2-2
2.3 Application 2-2
2.4 Package Outlines 2-3

3 Functional Description 3-1
3.1 Pin Configuration 3-2
3.2 Pin Definition and Function 3-2
3.3 Circuit Description 3-3
3.4 Functional Block Diagram 3-3

4 Applications 4-1
4.1 Test Circuit 1 4-2
4.2 Test Circuit 2 4-3
4.3 Test Circuit 2a 4-4
4.4 Test Circuit 2b 4-4
4.5 Test Circuit 2c 4-5

5 Reference 5-1
5.1 Absolute Maximum Ratings 5-2
5.2 Operating Range 5-3
5.3 AC/DC Characteristics 5-4
5.4 Input Impedance 5-6

2 Product Description

Contents of this Chapter

2.1 Overview 2-2

2.2 Features 2-2

2.3 Application 2-2

2.4 Package Outlines 2-3

2.1 Overview

The mixer used in this design is a general purpose up-/downconversion gilbert cell mixer. An amplified and filtered RF signal enters the IC via the pins MI/MIX. Using an externally supplied local oscillator at LO/LOX a converted output signal is created at the open collector output pins MO/MOX, which have to be connected to an external voltage supply.

2.2 Features

- B6HF bipolar technology, 25GHz f_T
- Gilbert cell mixer
- Reduced external components
- Mixer current adjustable with external resistors
- 1.6 mA current consumption typical (no external resistors used)
- Excellent port isolation
- Low noise
- Low spurious signal content
- Power on pin
- Frequency range up to 3.0 GHz
- Supply voltage 2.7 - 4.5V
- -40°C to +85°C operational temperature range

2.3 Application

- Cellular radio mixer
- Cordless telephone mixer
- UHF Transceiver
- RF data links
- RF/VHF/UHF frequency conversion

2.4 Package Outlines

P- TSSOP-10-1

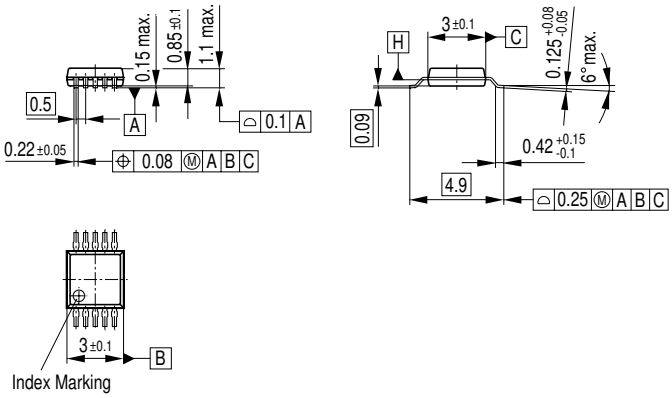

3 Functional Description

Contents of this Chapter

3.1 Pin Configuration 3-2

3.2 Pin Definition and Function 3-2

3.3 Circuit Description 3-3

3.4 Functional Block Diagram 3-3

3.1 Pin Configuration

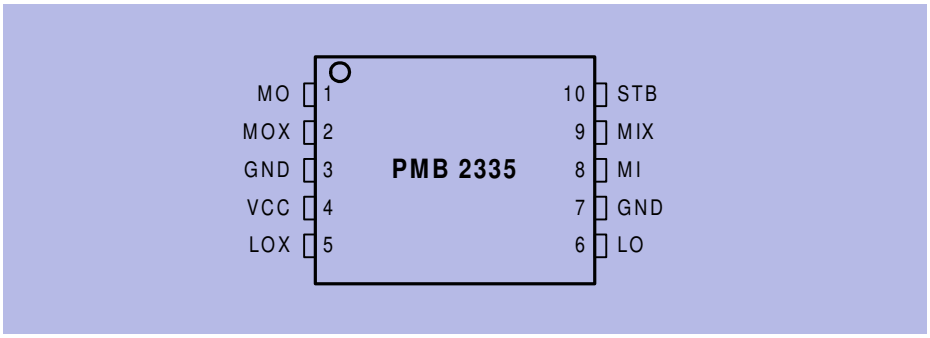

Pin_config.wmf

Figure 3-1 Pin Configuration

3.2 Pin Definition and Function

Table 3-1 Pin Definition and Function

Pin No.	Symbol	Equivalent I/O-Schematic	Function
1	MO		Mixer signal output, open collector, not inverted
2	MOX		Mixer signal output, open collector, inverted
3	GND		Ground (isolation) internally not connected
4	VCC		Mixer voltage supply
5	LOX		Mixer local oscillator signal base input, inverted
6	LO		Mixer local oscillator signal base input, not inverted
7	GND		Ground
8	MI		Mixer signal emitter input, not inverted
9	MIX		Mixer signal emitter input, inverted
10	STB		Mixer power down

3.3 Circuit Description

The mixer used in this design is a general purpose up-/downconversion gilbert cell mixer. An amplified and filtered RF signal enters the IC via the pins MI/MIX. Using an externally supplied local oscillator at LO/LOX a converted output signal is created at the open collector output pins MO/MOX, which have to be connected to an external voltage supply.

Voltage supply for the mixer has to be connected to the pins V_{CC} and GND. To increase the mixer current resistors need to be connected between the pins MI and GND, and between the pins MIX and GND.

Differential signals and symmetrical circuits are used throughout the IC.
An internal bias driver generates supply voltage and temperature compensated reference voltages.
All pins with the exception of GND are ESD protected.

3.4 Functional Block Diagram

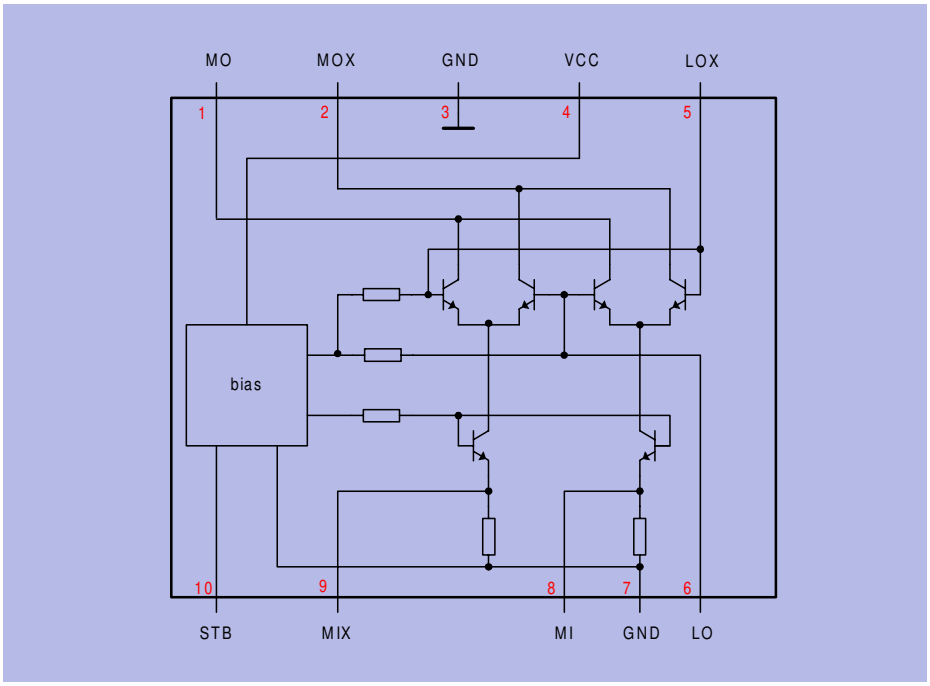

Funct_block.wmf

Figure 3-2 Functional Block Diagram

4 Applications

Contents of this Chapter

4.1 Test Circuit 1. 4-2

4.2 Test Circuit 2. 4-3

4.3 Test Circuit 2a. 4-4

4.4 Test Circuit 2b. 4-4

4.5 Test Circuit 2c. 4-5

4.1 Test Circuit 1

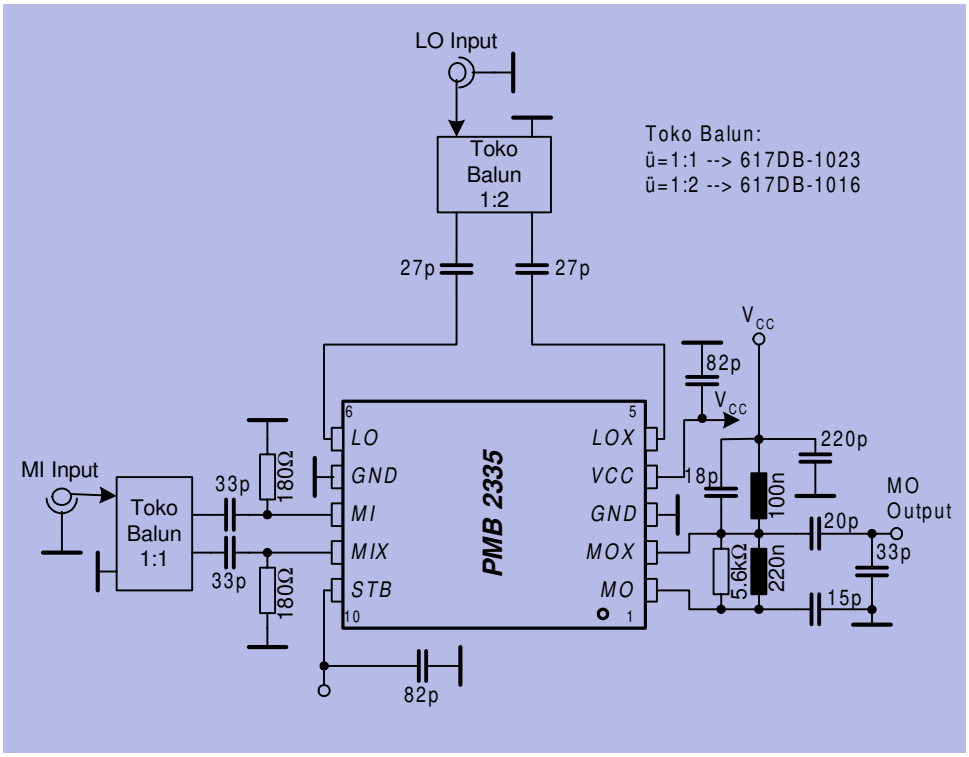

Test_Circuit1.wmf

Figure 4-1 Test Circuit for 120 MHz intermediate frequency

4.2 Test Circuit 2

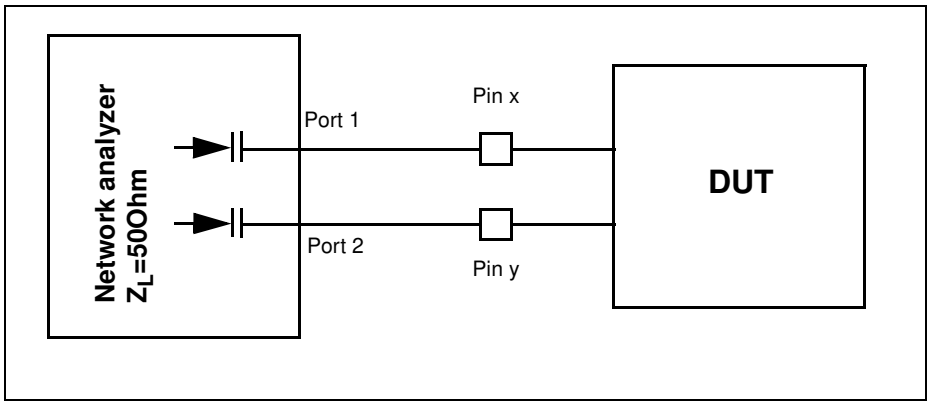

Figure 4-2 S-Parameter Measurement of Mixer S11, S12, S21, S22

Table 4-1

Test	Test Frequency [GHz]	Pin X	Pin Y
LO-Input impedance	.. - 3.0	5	6
Mi-Input impedance	.. - 3.0	8	9
MO-Output impedance	.. - 3.0	1	2

The S-Parameters are tested at the indicated frequency and the equivalent parallel or series circuit is calculated on this base.

Via the NWA the capacitive coupling is done and the open collector pins are connected to VCC. The output levels at port1 and 2 for pin x and y are -20dbm for MI and MO-impedances and -3dbm for the LO impedance.S-Parameters have to be considered as design hints and are measured with Infineon testboards (Compound board: RT/Duroid 3003 - FR4).

4.3 Test Circuit 2a

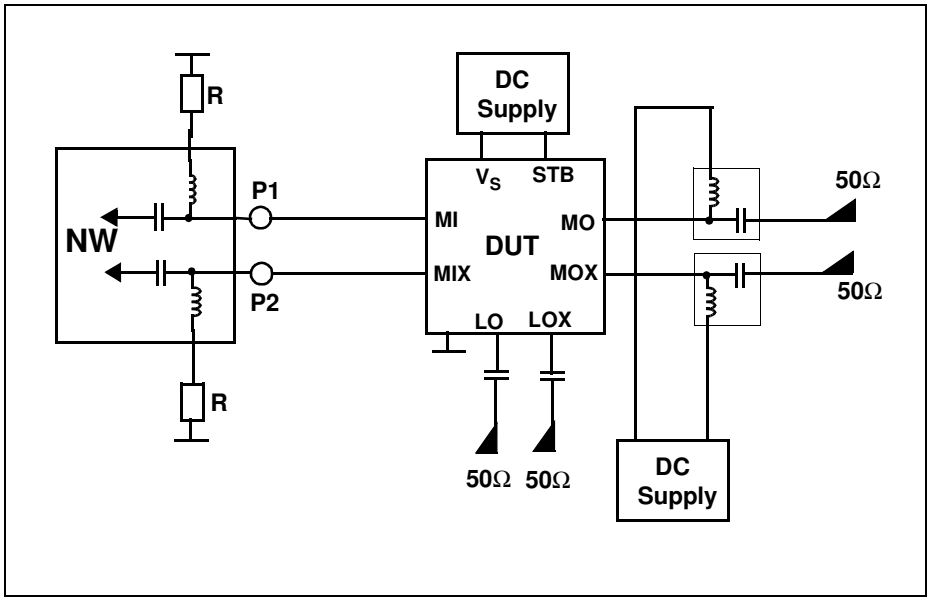

Figure 4-3 Mixer Input Impedance Measurement

4.4 Test Circuit 2b

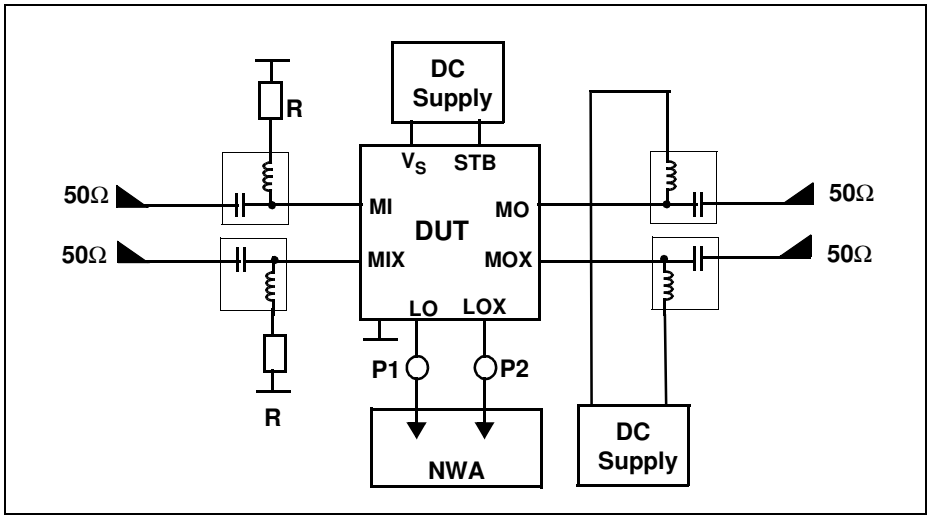

Figure 4-4 Mixer Local Oscilllator Impedance Measurement

4.5 Test Circuit 2c

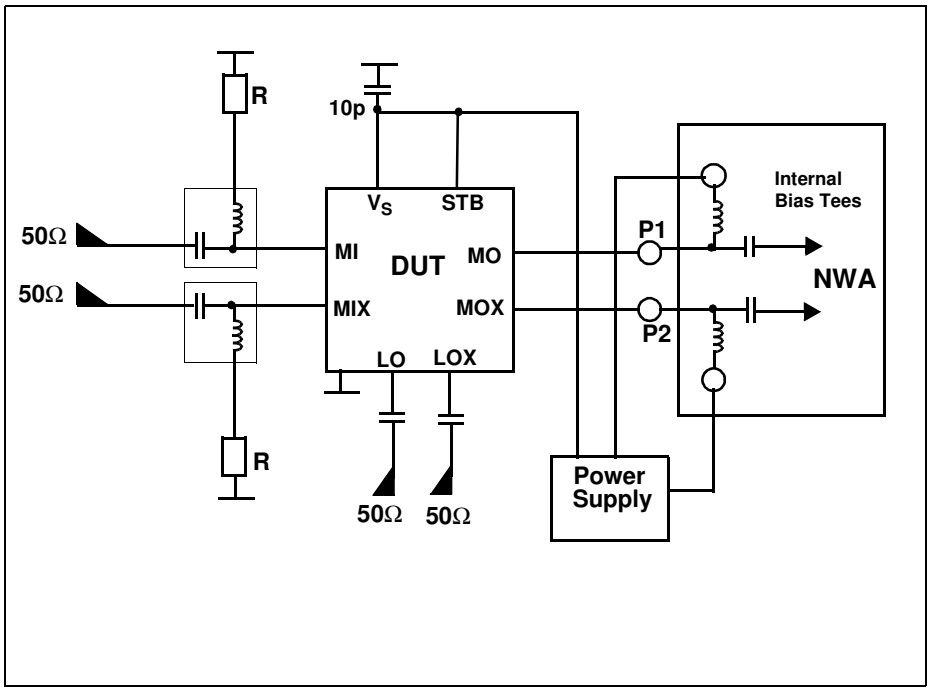

Figure 4-5 Mixer Output Impedance Measurement

5 Reference

Contents of this Chapter

5.1 Absolute Maximum Ratings 5-2

5.2 Operating Range 5-2

5.3 AC/DC Characteristics 5-3

5.4 Input Impedance 5-5

5.1 Absolute Maximum Ratings

WARNING

The maximum ratings may not be exceeded under any circumstances, not even momentarily and individually, as permanent damage to the IC will result.

Table 5-1 Absolute Maximum Ratings , Ambient temperature T_{amb} = -40 .. 85°C

#	Parameter	Symbol	Limit Values			Unit	Remarks
			min		max		
1	Supply Voltage	V_{VCC}	-0.3		5.0	V	
2	Input Voltage STB	V_{STB}	-0.3		V_S+0.3 5.0 max.	V V	
3	Input Voltage MI/MIX	$V_{MI/MIX}$	-0.3		1.9	V	V_S = 0V
4	Input Voltage LO/LOX	$V_{LO/LOX}$	0.6		V_S+0.3 5.0 max.	V V	
5	Open Collector Output Voltage	$V_{MO/MOX}$	1.7		V_S+0.3 5.0 max.	V V	
6	Open Collector Output Current	I_{MO+MOX}			13	mA	
7	Differential Input Voltage	V_{DIFF}			2.0	V_{PP}	
8	Junction Temperature	T_j			125	°C	
9	Storage Temperature	T_S	-40		125	°C	
10	Thermal Resistance	R_{thJA}			210	K/W	1)
11	ESD integrity	V_{ESD}	-1250		+1250	V	2)

1) Junction to Ambient

2) HBM according to MIL STD 883D, method 3015.7 and ESD Assn. Standard S5.1-1993

5.2 Operating Range

Within the operating range the IC operates as described in the circuit description. The AC/DC characteristic limits are not guaranteed.

Table 5-2 Operating Range, Supply voltage V_{VCC} = 2.7V...4.5V, Ambient temperature T_{amb} = -40 .. 85°C

#	Parameter	Symbol	Limit Values		Unit	Test Conditions	L	Item
			min	max				
1	MI/X Input Frequency	f_{MI}		3000	MHz		■	
2	LO/X Input Frequency	f_{LO}		3000	MHz		■	
3	IF Intermediate Frequency	f_{IF}		3000	MHz		■	

Note: Power levels refer to 50 Ω impedance

Note: ■ This value is guaranteed by design

5.3 AC/DC Characteristics

AC/DC characteristics involve the spread of values guaranteed within the specified supply voltage and ambient temperature range. Typical characteristics are the median of the production.

Table 5-3 AC/DC Characteristics with Supply voltage V_{VCC} = 2.7V...4.5V,Ambient temperature T_{amb} = +25°C

#		Symbol	Limit Values			Unit	Test Conditions	L	Test Circuit
			min	typ	max				
	Supply Current								
1	Supply current, total IC	$I_{1,2,4}$	1.1	1.6	2.1	mA	without external resistors $R_{1,2}$		1
2	Supply current, total IC	$I_{1,2,4}$		4.6		mA	including external resistors R_1=R_2 (=180Ω)	■	1
	Minimum value for external resistors at MI/MIX R_1=R_2=47Ω.								
	MIXER, Signal Input MI/MIX, Down conversion, R_1=R_2=180 Ω								
3	Input impedance	S_{11M}	Diagram 2a					■	
4	Max. input level, 1 db comp. at MO/MOX, IF=120MHz	P_{MI}		-6		dBm	f_{MI}=0.9GHz	■	1
5	Max. input level, 1 db comp. at MO/MOX, IF=120MHz	P_{MI}		-7		dBm	f_{MI}=1.8GHz	■	1
6	Input intercept point, Δf=800kHz, IF= 120MHz	$IICP3_{MI}$		3.5		dBm	f_{MI}=0.9GHz	■	1
7	Input intercept point, Δf=800kHz, IF= 120MHz	$IICP3_{MI}$		2.5		dBm	f_{MI}=1.8GHz	■	1
8	Noise figure, dsb IF = 120MHz	F_{MI}		7.5		dB	f_{MI}=0.9GHz *	■	1
9	Noise figure, dsb IF = 120MHz	F_{MI}		9.0		dB	f_{MI}=1.8GHz *	■	1
	MIXER, Local Oscillator Input LO/LOX, R_1=R_2=180 Ω								
10	Input impedance	S_{11LO}	Diagram 2b					■	
11	Input level	P_{LO}		-5		dBm	f_{MI}=0.9GHz, **	■	1
12	Input level	P_{LO}		-5		dBm	f_{MI}=1.8GHz, **	■	1
	MIXER, Signal Output MO/MOX, Down conversion, R_1=R_2=180 Ω								
13	Output current	I_{MO+MOX}		4.0		mA		■	1
14	Output resistance	R_{MODiff}		31		kΩ	f_{MO}= 120 MHz	■	1

*) matching network used
**) referenced for specified mixer performance
■ This value is guaranteed by design

Table 5-3 AC/DC Characteristics with Supply voltage V_{VCC} = 2.7V...4.5V,Ambient temperature T_{amb} = +25°C (continued)

		Symbol	Limit Values			Unit	Test Conditions	L	Test Circuit
			min	typ	max				
15	Output capacitance	C_{MODiff}		0.41		pF	f_{MO}= 120 MHz	■	1
16	Power gain, f_{MI}=0.9 MHz	P_{MI}		4.3		dB	f_{MO}=120MHz	■	1
17	Power gain, f_{MI}=1.8 MHz	P_{MI}		4.3		dB	f_{MO}=120MHz	■	1
	MIXER, Isolation Between In-/Output, R_1=R_2=180 Ω								
18	MI to MO	A_{MI-MO}		46		dB	f_{MI}=0.9GHz	■	1
19	MI to MO	A_{MI-MO}		24		dB	f_{MI}=1.8GHz	■	1
20	LO to MO	A_{LO-MO}		38		dB	f_{LO}=0.9GHz	■	1
21	LO to MO	A_{LO-MO}		26		dB	f_{LO}=1.8GHz	■	1
22	LO to MI	A_{LO-MI}		59		dB	f_{LO}=0.9GHz	■	1
23	LO to MI	A_{LO-MI}		48		dB	f_{LO}=1.8GHz	■	1
24	MO to MI	A_{MO-MI}		64		dB	f_{MO}=120MHz	■	1
25	MO to LO	A_{MO-LO}		68		dB	f_{MO}=120MHz	■	1

■ This value is guaranteed by design
Specification values without input transformer loss, (≈1dB@900MHz; ≈1.5 dB @1.8GHz)

5.4 Input Impedance

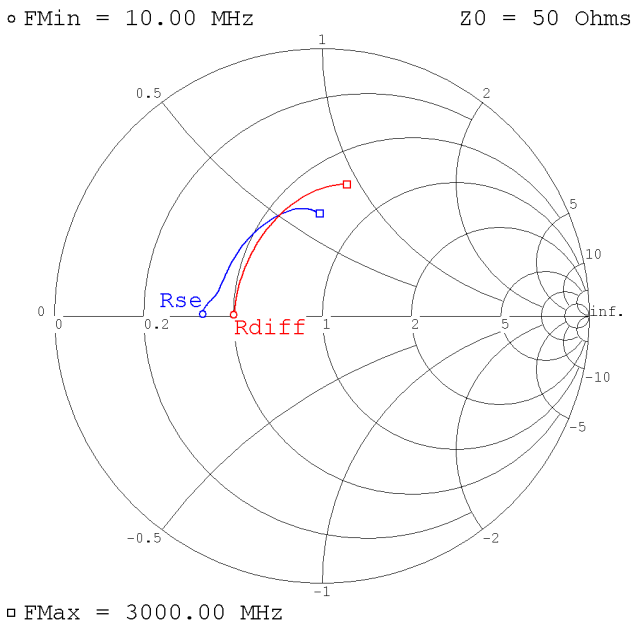

mi5m02v7.wmf

Figure 5-1 Diagram 2a, MI/MIX- Input Impedance at 5mA, 2.7V

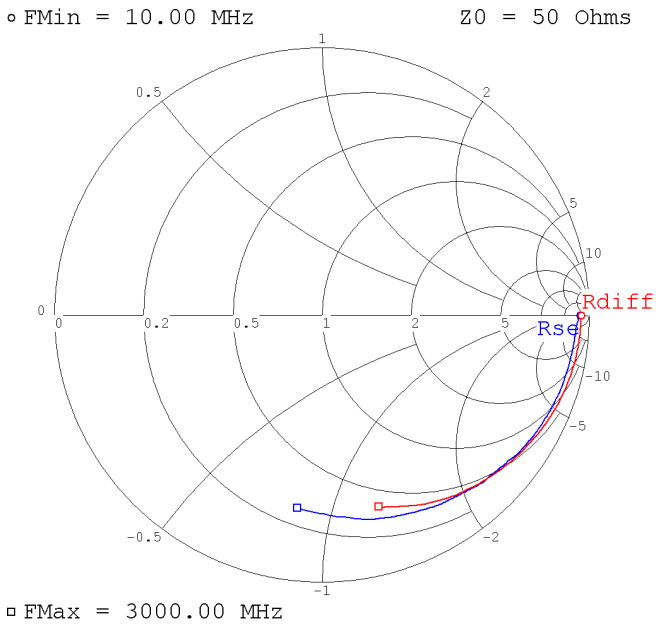

lo5m02v7.wmf

Figure 5-2 Diagram 2b, LO/LOX- Input Impedance at 5mA, 2.7V