Chipsmall Limited consists of a professional team with an average of over 10 year of expertise in the distribution of electronic components. Based in Hongkong, we have already established firm and mutual-benefit business relationships with customers from,Europe,America and south Asia,supplying obsolete and hard-to-find components to meet their specific needs.

With the principle of “Quality Parts,Customers Priority,Honest Operation,and Considerate Service”,our business mainly focus on the distribution of electronic components. Line cards we deal with include Microchip,ALPS,ROHM,Xilinx,Pulse,ON,Everlight and Freescale. Main products comprise IC,Modules,Potentiometer,IC Socket,Relay,Connector.Our parts cover such applications as commercial,industrial, and automotives areas.

We are looking forward to setting up business relationship with you and hope to provide you with the best service and solution. Let us make a better world for our industry!

Contact us

Tel: +86-755-8981 8866 Fax: +86-755-8427 6832
Email & Skype: info@chipsmall.com Web: www.chipsmall.com
Address: A1208, Overseas Decoration Building, #122 Zhenhua RD., Futian, Shenzhen, China

PART NAME	NEMA 4X PLASTIC BOX w/EXTERNAL MTG. BRKT.	PART No.	PN-1323-MB PN-1323-CMB PN-1323-DGMB	REVISION DATE	5-26-11

MATERIAL & FINISH:
(-MB SUFFIX PART NO.) POLYCARBONATE UL94-HB, UV STABILIZED, SERVICE TEMPERATURE RANGE: -40˚C TO +120˚C, LIGHT GRAY BODY & COVER.
(-CMB SUFFIX PART NO.) SAME AS -MB EXCEPT CLEAR COVER.
(-DGMB SUFFIX PART NO.) ABS UL94-HB, SERVICE TEMPERATURE RANGE: -40˚C TO +80˚C, DARK GRAY BODY & COVER.

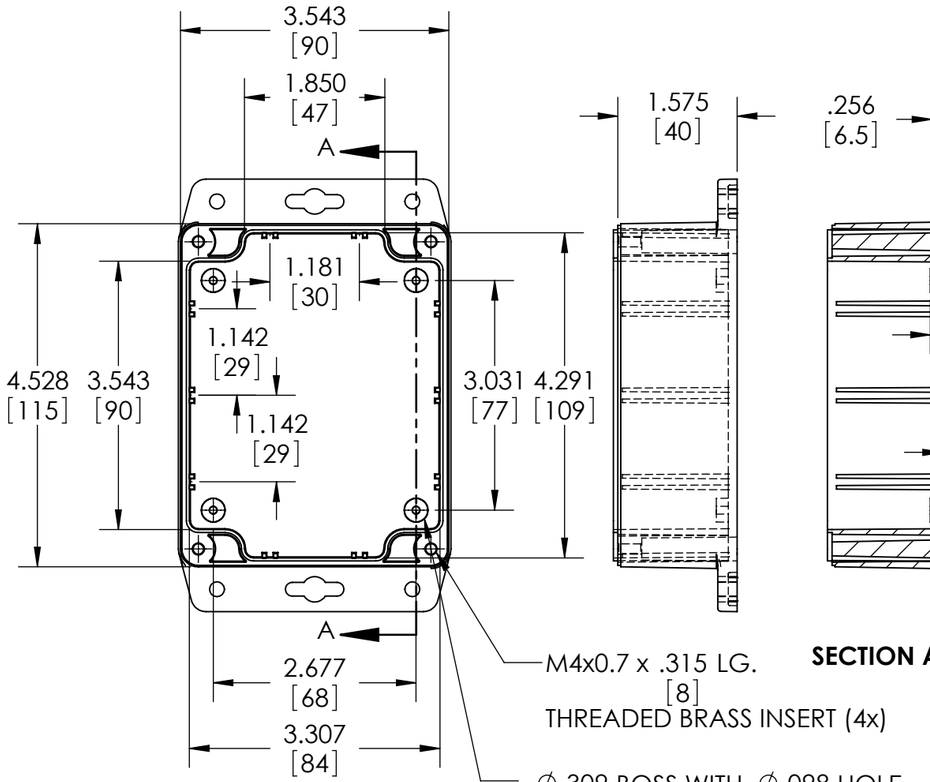

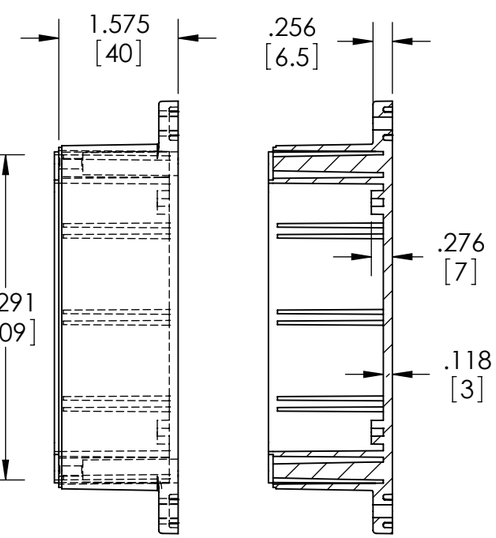

SECTION A-A

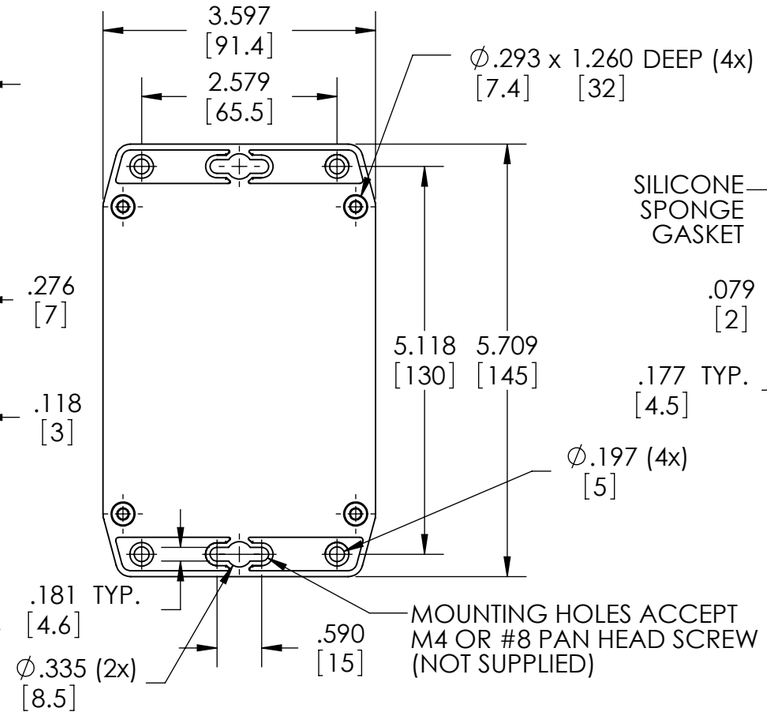

BODY

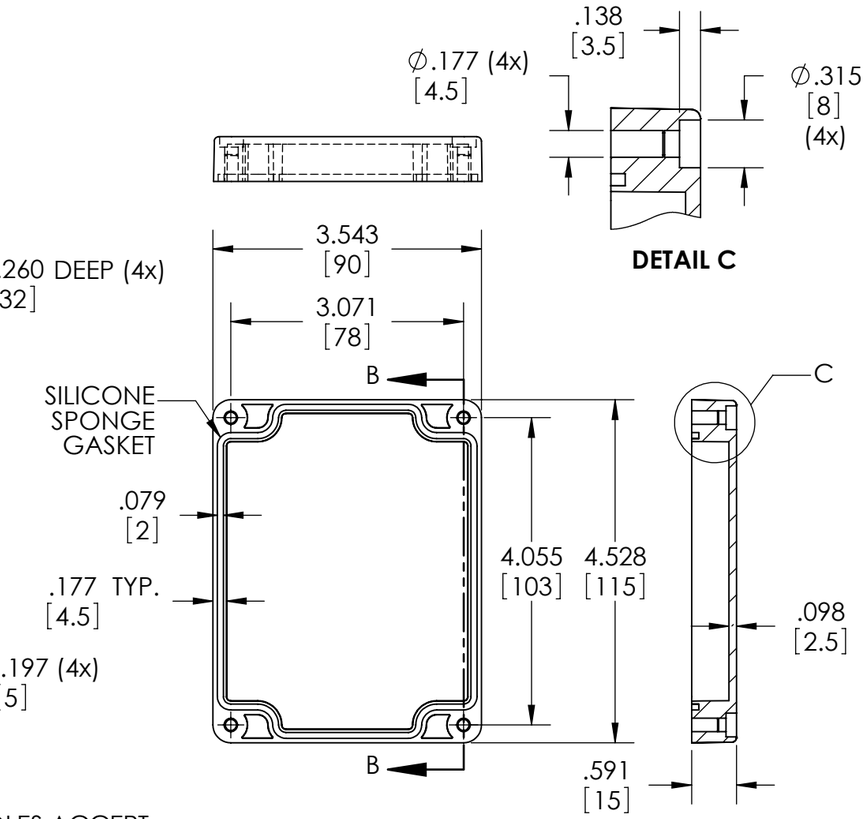

COVER

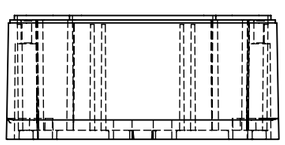

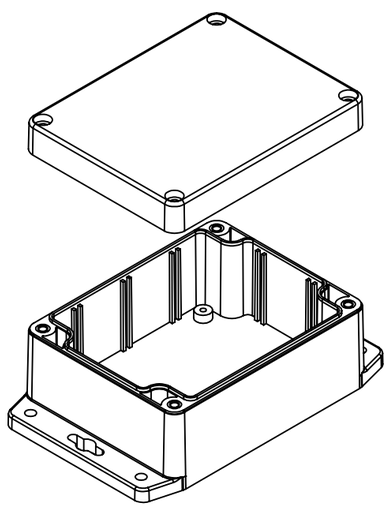

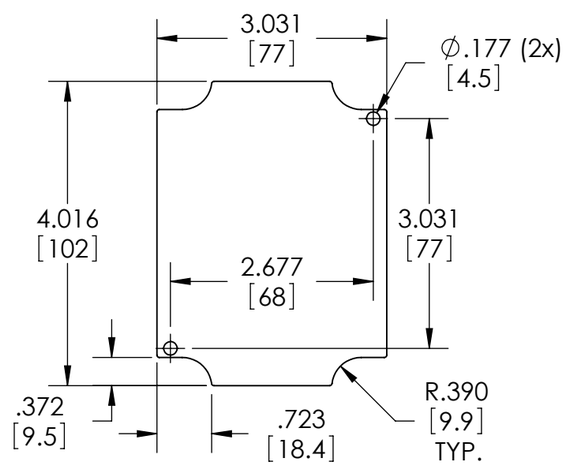

SUGGESTED PC BOARD LAYOUT

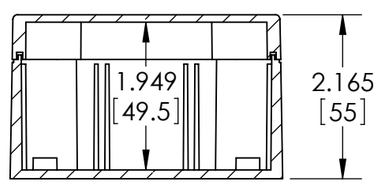

NOTES:
1.) FOUR (4) M4x0.7 x 20mm (.787") LG. STAINLESS STEEL SCREWS SUPPLIED FOR ASSEMBLY OF COVER TO BODY.
2.) BOXES DESIGNED TO MEET FOLLOWING STANDARDS: NEMA 1, 2, 4, 4X, 12, 13 AND IEC529-IP65 REQUIREMENTS.
3.) ALL HOLE DIAMETERS HAVE ±.005[.12] TOLERANCE. ALL OTHER DIMENSIONS HAVE ±.015[.38] TOLERANCE.
4.) ALL OUTSIDE DRAFT ANGLE: 1˚ ALL INSIDE DRAFT ANGLE: 1/2˚