Chipsmall Limited consists of a professional team with an average of over 10 year of expertise in the distribution of electronic components. Based in Hongkong, we have already established firm and mutual-benefit business relationships with customers from,Europe,America and south Asia,supplying obsolete and hard-to-find components to meet their specific needs.

With the principle of “Quality Parts,Customers Priority,Honest Operation,and Considerate Service”,our business mainly focus on the distribution of electronic components. Line cards we deal with include Microchip,ALPS,ROHM,Xilinx,Pulse,ON,Everlight and Freescale. Main products comprise IC,Modules,Potentiometer,IC Socket,Relay,Connector.Our parts cover such applications as commercial,industrial, and automotives areas.

We are looking forward to setting up business relationship with you and hope to provide you with the best service and solution. Let us make a better world for our industry!

Contact us

Tel: +86-755-8981 8866 Fax: +86-755-8427 6832
Email & Skype: info@chipsmall.com Web: www.chipsmall.com
Address: A1208, Overseas Decoration Building, #122 Zhenhua RD., Futian, Shenzhen, China

BUD	PART NAME	NEMA 4X PLASTIC BOX (PTS SERIES)	PART No.	PTS-25342 & PTS-25342-C	REVISION DATE	4-22-16

DRAWING FOR REFERENCE

WE RESERVE THE RIGHT TO MAKE CHANGES TO OUR STANDARD PRODUCTS. PLEASE CONSULT WITH BUD INDUSTRIES PRIOR TO USING THIS DRAWING FOR DESIGN PURPOSE.

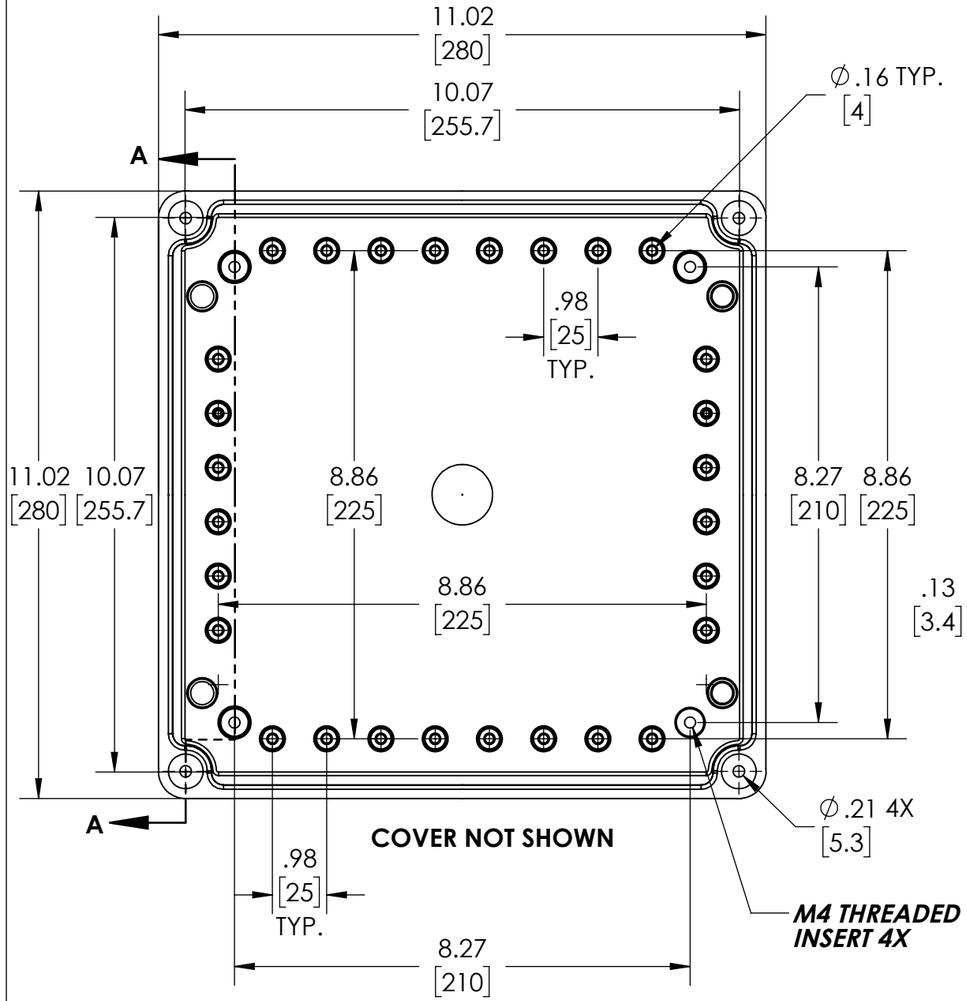

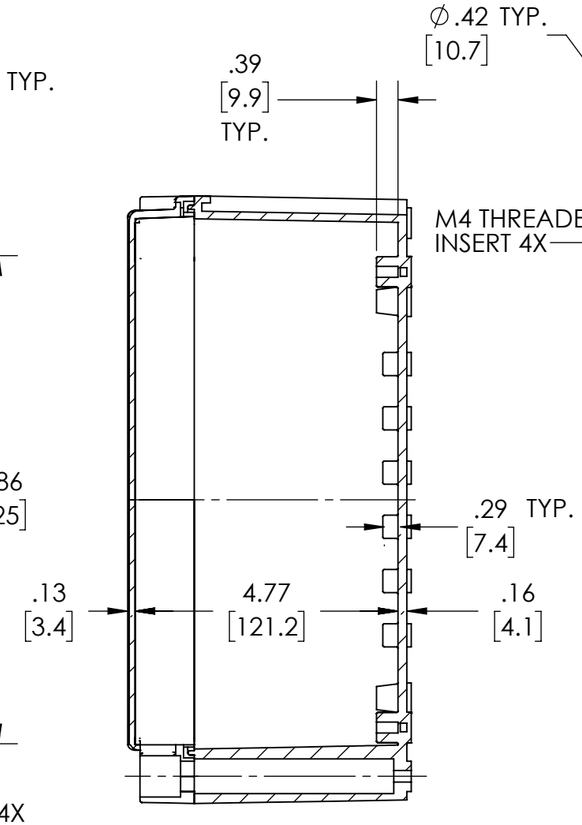

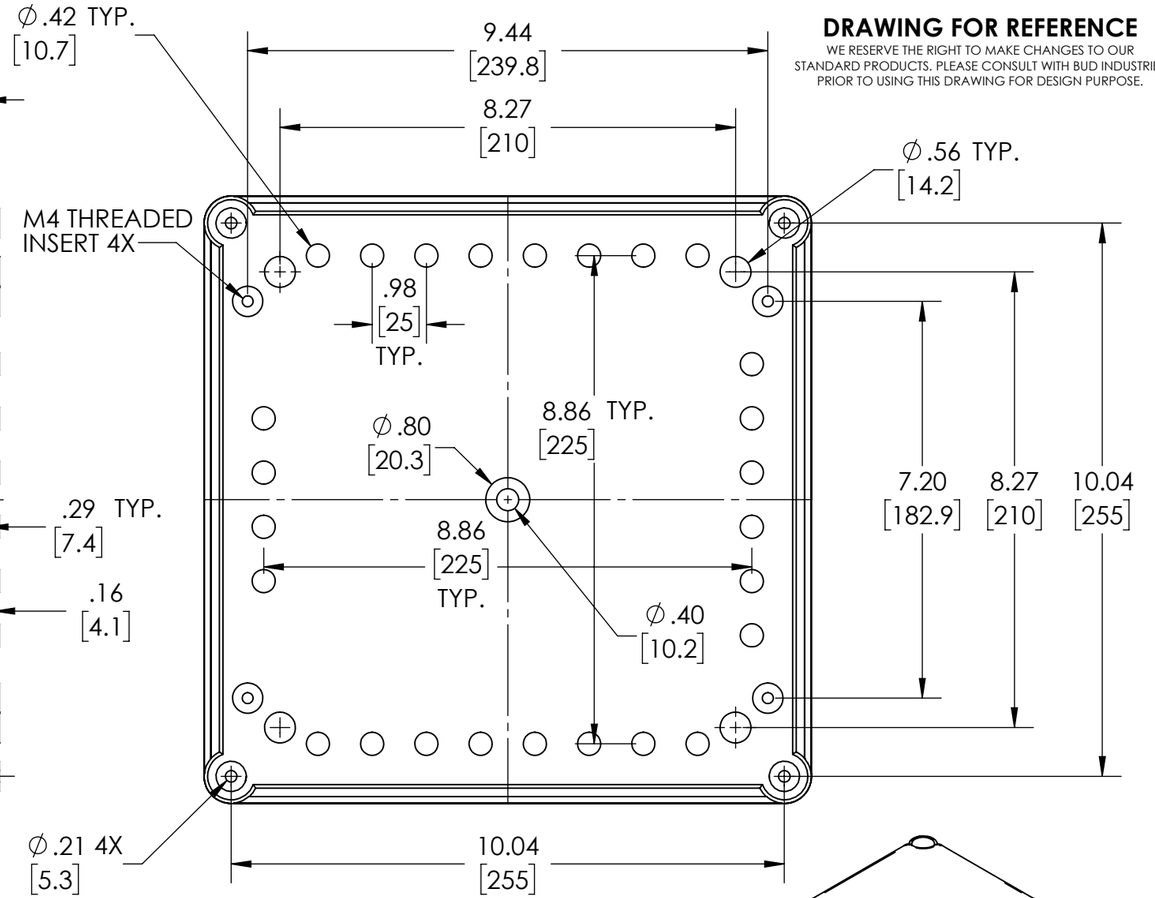

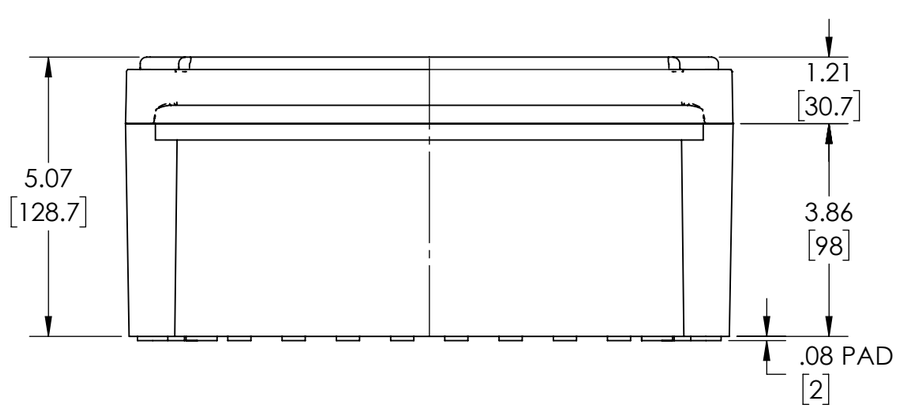

NOTES:

1- MATERIAL: BODY - POLYCARBONATE WITH 10% FIBERGLASS
COVER - POLYCARBONATE

2- COLOR: NO SUFFIX - GRAY BODY & GRAY COVER
(-C) SUFFIX - GRAY BODY & CLEAR COVER

3- COVER ATTACHES WITH NON-METALLIC CAPTIVE SCREWS
(ITEMS NOT SHOWN)

4- SUPPLIED WITH FOUR M4 x 10mm LG. PAN HEAD SCREWS
(ITEMS NOT SHOWN)

5- DIMENSIONS ARE INCH [MM]
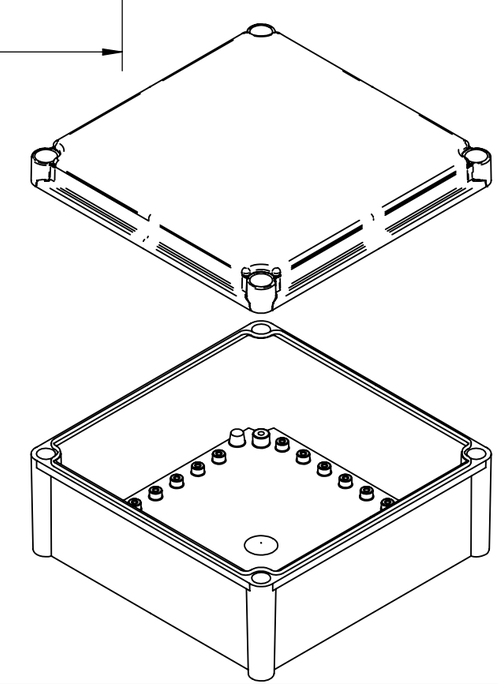
OPTIONAL ACCESSORIES:
STEEL INTERNAL PANEL #PTX-25342
PLASTIC INTERNAL PANEL #PTX-25342-P
STEEL EXTERNAL BRACKET #NBX-10922
PLASTIC EXTERNAL BRACKET #PIx-4117