Chipsmall Limited consists of a professional team with an average of over 10 year of expertise in the distribution of electronic components. Based in Hongkong, we have already established firm and mutual-benefit business relationships with customers from,Europe,America and south Asia,supplying obsolete and hard-to-find components to meet their specific needs.

With the principle of “Quality Parts,Customers Priority,Honest Operation,and Considerate Service”,our business mainly focus on the distribution of electronic components. Line cards we deal with include Microchip,ALPS,ROHM,Xilinx,Pulse,ON,Everlight and Freescale. Main products comprise IC,Modules,Potentiometer,IC Socket,Relay,Connector.Our parts cover such applications as commercial,industrial, and automotives areas.

We are looking forward to setting up business relationship with you and hope to provide you with the best service and solution. Let us make a better world for our industry!

Contact us

Tel: +86-755-8981 8866 Fax: +86-755-8427 6832
Email & Skype: info@chipsmall.com Web: www.chipsmall.com
Address: A1208, Overseas Decoration Building, #122 Zhenhua RD., Futian, Shenzhen, China

THIS COPY IS PROVIDED ON A RESTRICTED BASIS AND IS NOT TO BE USED IN ANY WAY DETRIMENTAL TO THE INTERESTS OF PANDUIT CORP.

PANDUIT PART NUMBER	STUD SIZE	DIMENSIONS in.				
		A ±.03	W ±.01	C ±.02	M ±.03	H ±.01
PV14-6LFX	#6	.95 (24.13)	.25 (6.35)	.20 (5.08)	.74 (18.80)	.15 (3.81)
PV14-8LFX	#8	1.01 (25.66)	.29 (7.37)	.23 (5.84)	.78 (18.82)	.17 (4.32)
PV14-10LFX	#10	1.01 (25.66)	.33 (8.38)	.23 (5.84)	.78 (18.82)	.20 (5.08)

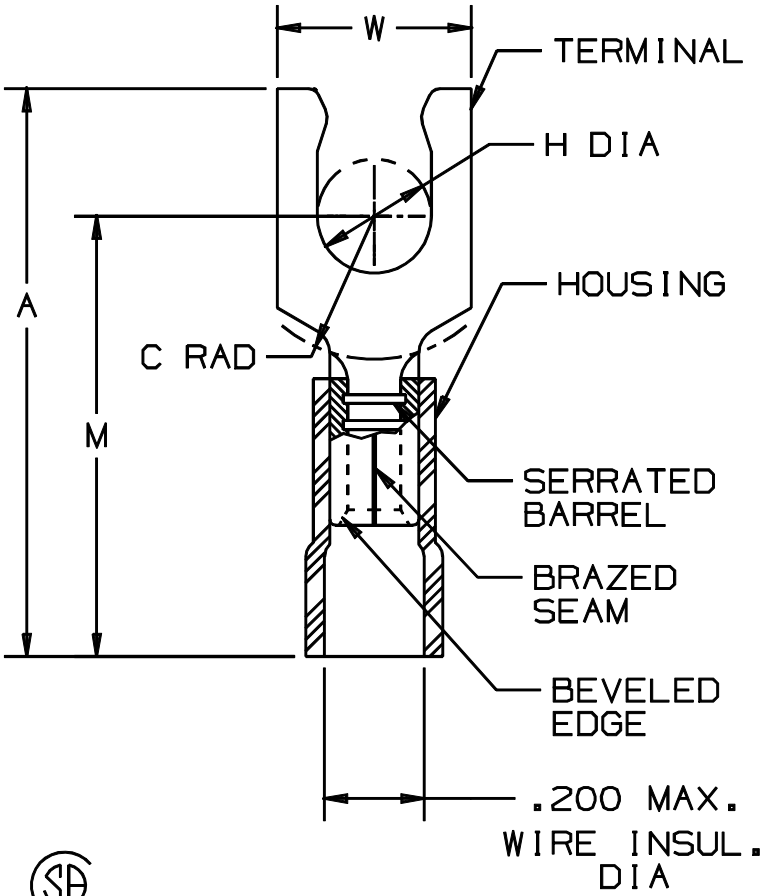

NOTES:

1. UL LISTED & CSA CERTIFIED FOR
   A. 600 V. MAX. VOLTAGE RATING (1000 V. MAX. IN SIGNS, FIXTURES AND LUMINAIRES.)
   B. 18-14 AWG SOLID OR STRANDED COPPER WIRE & 221°F (105°C) MAX TEMP RATING, WITH THE CT-500, CT-1550, CT-1551 & CT-550 INSTALLATION TOOLS.
   C. 16-14 AWG SOLID OR STRANDED COPPER WIRE & 167°F (75°C) MAX TEMP RATING WITH THE CT-100 AND CT-250 INSTALLATION TOOLS.
2. MATERIAL:
   A. STAMPING - .032 (.81) THK COPPER, TIN PLATED
   B. HOUSING - VINYL, BLUE
3. STRIP LENGTH 5/16 $^{+1/32}_{-0}$
4. PACKAGE QTY.: -C=100/-M=1000
5. DIMENSIONS IN BRACKETS ARE IN MILLIMETERS

LISTED 587H E52164

CERTIFIED LR31212

A41225_05

REV	DATE	BY	CHK	DESCRIPTION	ECN #	CUST	PM
05	1/01	KMD		CAD FILE SPEC. WAS N41225AA_PCD_04			
04	2/96	ED		REV.S TO TABLE & NOTES FILESPEC WAS: A41225A.PRT	04117		
03	7-88	DW		REDRAWN WITH REVISIONS		JRB	

PANDUIT CORP. TINLEY PARK, ILLINOIS

#16-14 BARREL VINYL INSULATED LOCKING FORK, .200 (5.08) MAX. WIRE INSULATION DIAMETER

DRAWN BY	CHK'D	SCALE	DRAWING NO.
DAW	JH	NONE	A41225