Chipsmall Limited consists of a professional team with an average of over 10 year of expertise in the distribution of electronic components. Based in Hongkong, we have already established firm and mutual-benefit business relationships with customers from,Europe,America and south Asia,supplying obsolete and hard-to-find components to meet their specific needs.

With the principle of “Quality Parts,Customers Priority,Honest Operation,and Considerate Service”,our business mainly focus on the distribution of electronic components. Line cards we deal with include Microchip,ALPS,ROHM,Xilinx,Pulse,ON,Everlight and Freescale. Main products comprise IC,Modules,Potentiometer,IC Socket,Relay,Connector.Our parts cover such applications as commercial,industrial, and automotives areas.

We are looking forward to setting up business relationship with you and hope to provide you with the best service and solution. Let us make a better world for our industry!

Contact us

Tel: +86-755-8981 8866 Fax: +86-755-8427 6832
Email & Skype: info@chipsmall.com Web: www.chipsmall.com
Address: A1208, Overseas Decoration Building, #122 Zhenhua RD., Futian, Shenzhen, China

THIS COPY IS PROVIDED ON A RESTRICTED BASIS AND IS NOT TO BE USED IN ANY WAY DETRIMENTAL TO THE INTERESTS OF PANDUIT CORP.

PANDUIT PART #	STUD SIZE		DIMENSIONS in. [mm]					TOOLS
	ENGLISH	METRIC	L ± .03 [0,51]	W ± .01 [0,25]	C ± .02 [0,38]	M ± .03 [0,51]	H ± .01 [0,25]	
PMV1-3FB	--	M3	.85 [21,6]	.23 [5,84]	.19 [4,83]	.71 [18,03]	.13 [3,30]	CT-100A *CT-160 *CT-260 *CT-400 CT-600-A (CT-500CH) CT-600-A (CT-550CH) CT-1550 CT-1551 CT-2500 (CT-2550CH)
PV18-6F	#6	M3,5	.86 [21,8]	.30 [7,6]	.21 [5,3]	.69 [17,5]	.15 [3,8]	
PV18-6FN	#6	M3,5	.85 [21,6]	.24 [6,1]	.21 [5,3]	.69 [17,5]	.15 [3,8]	
PV18-8F	#8	M4	.93 [23,6]	.32 [8,1]	.25 [6,4]	.73 [18,5]	.17 [4,3]	
PV18-10F	#10	--	.93 [23,6]	.35 [8,9]	.25 [6,4]	.75 [19,1]	.20 [5,1]	
PV18-10FN	#10	--	.93 [23,6]	.31 [7,9]	.25 [6,4]	.75 [19,1]	.20 [5,1]	
PMV1-5FB	--	M5	.93 [23,6]	.36 [9,14]	.24 [6,10]	.76 [19,30]	.20 [5,1]	

*PANDUIT APPROVED TOOL

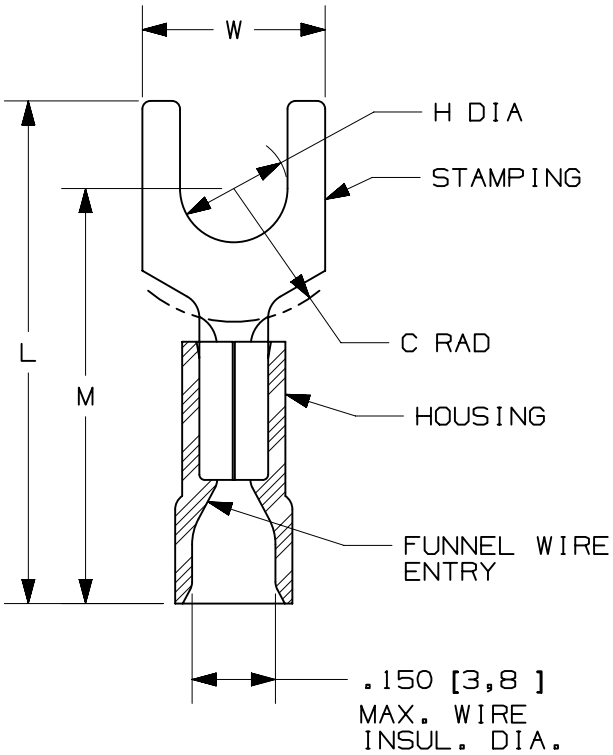

NOTES:

1. cULus LISTED FOR:
   A. 22-16 AWG [0,5-1,5 mm²] SOLID OR STRANDED COPPER WIRE
   B. 221°F [105°C] MAX. OPERATING TEMPERATURE
   C. 600V. MAX. BLDG WIRE
      (1000 V. MAX. IN SIGNS, FIXTURES & LUMINAIRES)
2. SEE www.panduit.com FOR PACKAGE QUANTITIES
3. MATERIAL:
   A. STAMPING: .032" [0,8] THK COPPER, TIN PLATED
   B. HOUSING: VINYL, RED
4. DIMENSIONS IN BRACKETS ARE METRIC EQUIVALENT
5. WIRE STRIP LENGTH: 5/16 $^{+1/32}_{-0}$ [7,9 $^{+0,8}_{-0}$]

c UL us
LISTED
587H
E52164

REV	DATE	BY	CHK	APR	DESCRIPTION	ECN
09	07/14	MBY	JHNU	RGB	REVISED NOTES, MOVED TOOLS TO TABLE, REVISED CERTIFICATION	N41194BA-A41194
08	07.17.12	BDK	LCA	VMB	ADDED PMV1-3FB AND PMV1-5FB. ADDED METRIC EQUIVALENT. CHANGE PACKAGING NOTE. REVISED INSTALLATION TOOLS NOTE. BROUGHT DRAWING TO CURRENT STANDARDS.	N41194BA-DC

TITLE
2 PC. VINYL INSULATED, #22-18 BARREL, FORKS
CUSTOMER DRAWING

ITEM REVISION NAME: N41194BA/09
DATASET FILE NAME: N41194BA_DC/09A

PANDUIT™

UNLESS OTHERWISE SPECIFIED, DIMENSIONAL TOLERANCES ARE: IN [mm]
.X ± .XXX ±
.XX ± ANGLES ±
THIRD ANGLE PROJECTION

MATERIAL: SEE NOTES
DRAWING NUMBER: A41194

DRAWN BY	DATE	CHK	SCALE	SHEET 1 OF 1	SIZE
FES	-	FS	N.T.S.		A

D10100DA/12