Chipsmall Limited consists of a professional team with an average of over 10 year of expertise in the distribution of electronic components. Based in Hongkong, we have already established firm and mutual-benefit business relationships with customers from,Europe,America and south Asia,supplying obsolete and hard-to-find components to meet their specific needs.

With the principle of “Quality Parts,Customers Priority,Honest Operation,and Considerate Service”,our business mainly focus on the distribution of electronic components. Line cards we deal with include Microchip,ALPS,ROHM,Xilinx,Pulse,ON,Everlight and Freescale. Main products comprise IC,Modules,Potentiometer,IC Socket,Relay,Connector.Our parts cover such applications as commercial,industrial, and automotives areas.

We are looking forward to setting up business relationship with you and hope to provide you with the best service and solution. Let us make a better world for our industry!

# Contact us

Tel: +86-755-8981 8866 Fax: +86-755-8427 6832
Email & Skype: info@chipsmall.com Web: www.chipsmall.com
Address: A1208, Overseas Decoration Building, #122 Zhenhua RD., Futian, Shenzhen, China

THIS COPY IS PROVIDED ON A RESTRICTED BASIS AND IS NOT TO BE USED IN ANY WAY DETRIMENTAL TO THE INTERESTS OF PANDUIT CORP.

| PART NUMBER | | STUD SIZE | DIMENSIONS in. | | | | |
|---|---|---|---|---|---|---|---|
| PREFIX | PK | | A ±.03 | W ±.01 | C ±.02 | M ±.03 | H ±.01 |
| PV18-6LF | -C<br>-M<br>-MY | #6 | .90<br>(22,9) | .27<br>(6,9) | .22<br>(5,6) | .68<br>(17,3) | .14<br>(3,6) |
| PV18-6LFW | -C<br>-M<br>-MY | #6 | .90<br>(22,9) | .29<br>(7,4) | .22<br>(5,6) | .68<br>(17,3) | .14<br>(3,6) |
| PV18-8LF | -C<br>-M<br>-MY | #8 | .97<br>(24,6) | .29<br>(7,4) | .25<br>(6,4) | .73<br>(18,5) | .16<br>(4,1) |
| PV18-10LF | -C<br>-M<br>-MY | #10 | .97<br>(24,6) | .33<br>(8,4) | .25<br>(6,4) | .73<br>(18,5) | .19<br>(4,8) |
| PV18-10LFN* | -C<br>-M | #10 | .97<br>(24,6) | .29<br>(7,4) | .25<br>(6,4) | .73<br>(18,5) | .19<br>(4,8) |

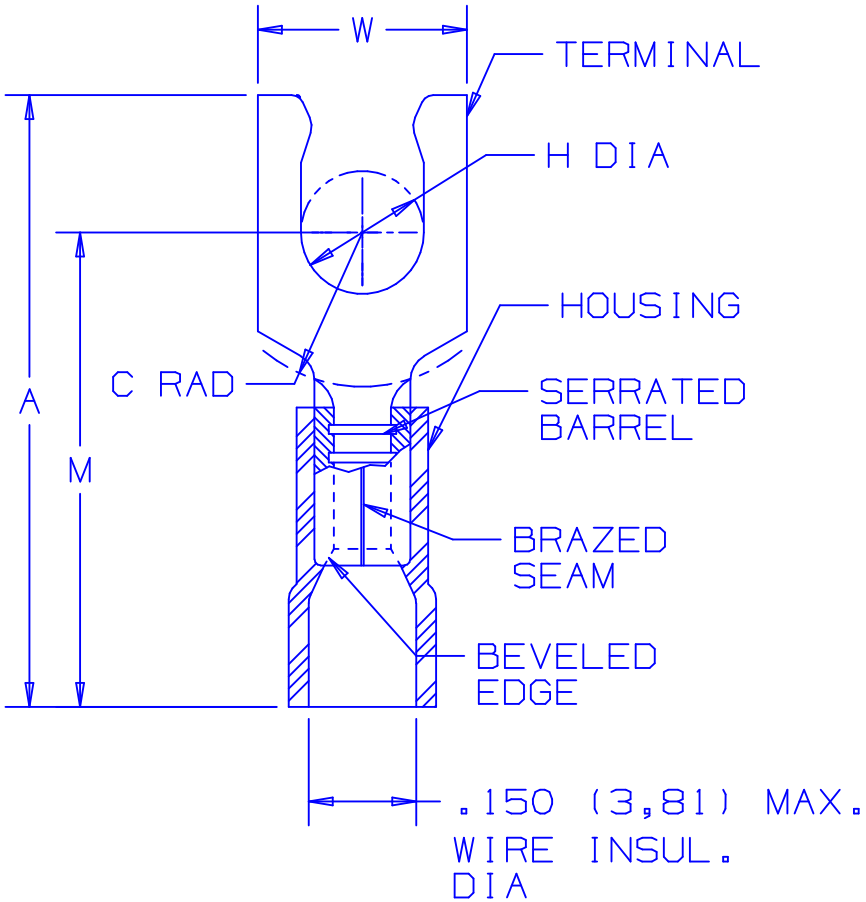


NOTES:

1. USED FOR:
   A. 600 MAX. VOLTAGE RATING(1000V. MAX. IN SIGNS, FIXTURES & LUMINARIES)
   B. #22-18 AWG STRANDED COPPER WIRE RANGE , WITH CT-100, CT-1550, CT-1551 INSTALLATION TOOLS.
   C. 221°F (105°C) MAX TEMP RATING -0 OF INSULATION MATERIAL. 167°F (75°C) MAX TEMP RATING WITH CT-100 INSTALLATION TOOL
2. WIRE STRIP LENGTH : 5/16 +1/32 (7,9 +0,8)
3. PACKAGE QUANTITY (SUFFIX TO BASIC PART NO.):
   A. STANDARD -C=100
   B. BULK -M=1000, -MY=1000
4. MATERIAL:
   A. STAMPING: .032 (,81) THICK TIN PLATED COPPER
   B. HOUSING; RED VINYL
5. DIMENSIONS IN BRACKETS ARE IN MILLIMETERS.

UL LISTED 587H E52164

CSA CERTIFIED LR31212

*PV18-10LFN IS NOT UL LISTED OR CSA CERTIFIED.

A41288_11

| REV | DATE | BY | CHK | DESCRIPTION | ECN # | CUST | PM |
|---|---|---|---|---|---|---|---|
| 11 | 5/05 | JHNU | | ADDED PACKAGING CODE "MY" TO DRAWING. | | | |
| 10 | 1/01 | RM | SKB | FILESPEC WAS N41288_09_PCD | 08933 | JAC | CCH |
| 9 | 10/00 | EJS | | REMOVED CT-500, CT-550, ADDED CT-1550, CT-1551 TO NOTE 1-B, MAX. WIRE INSULATION, UPDATED NOTE 1-A TO (1000V. MAX. IN SIGNS, FIXTURES & LUMINARIES) | 08802 | | |
| | | | | DIAMETER WAS .158, REMOVED PART PV18-10LFW, ADDED PART PV18-10LFN TO TABLE, ADDED 167°F (75°C) MAX TEMP RATING WITH CT-100 INSTALLATION TOOL | | | |
| 8 | 6/95 | MS | RLS | PV18-6LF DIM "W" WAS .25/6,35 | 03388 | LA | KRS |

PANDUIT CORP. TINLEY PARK, ILLINOIS

#22-18 BARREL FUNNELED VINYL INSULATED LOCKING FORK, .150 (3,81) MAX. WIRE INSULATION DIAMETER

| DRAWN BY | CHK'D | SCALE | DRAWING NO. |
|---|---|---|---|
| MS | LA | NONE | A41288 |