Chipsmall Limited consists of a professional team with an average of over 10 year of expertise in the distribution of electronic components. Based in Hongkong, we have already established firm and mutual-benefit business relationships with customers from,Europe,America and south Asia,supplying obsolete and hard-to-find components to meet their specific needs.

With the principle of “Quality Parts,Customers Priority,Honest Operation,and Considerate Service”,our business mainly focus on the distribution of electronic components. Line cards we deal with include Microchip,ALPS,ROHM,Xilinx,Pulse,ON,Everlight and Freescale. Main products comprise IC,Modules,Potentiometer,IC Socket,Relay,Connector.Our parts cover such applications as commercial,industrial, and automotives areas.

We are looking forward to setting up business relationship with you and hope to provide you with the best service and solution. Let us make a better world for our industry!

Contact us

Tel: +86-755-8981 8866 Fax: +86-755-8427 6832
Email & Skype: info@chipsmall.com Web: www.chipsmall.com
Address: A1208, Overseas Decoration Building, #122 Zhenhua RD., Futian, Shenzhen, China

THIS COPY IS PROVIDED ON A RESTRICTED BASIS AND IS NOT TO BE USED IN ANY WAY DETRIMENTAL TO THE INTERESTS OF PANDUIT CORP.

PANDUIT PART NUMBER	STUD SIZE	DIMENSIONS in.				
		A ±.020	W ±.010	C ±.015	M ±.020	H ±.010
PV18-6FX	#6	.83 (21.08)	.30 (7.62)	.21 (5.33)	.69 (17.53)	.15 (3.81)
PV18-8FX	#8	.89 (22.61)	.32 (8.13)	.25 (6.35)	.73 (18.54)	.17 (4.32)
PV18-10FX	#10	.91 (23.11)	.35 (8.89)	.25 (6.35)	.75 (19.05)	.20 (5.08)

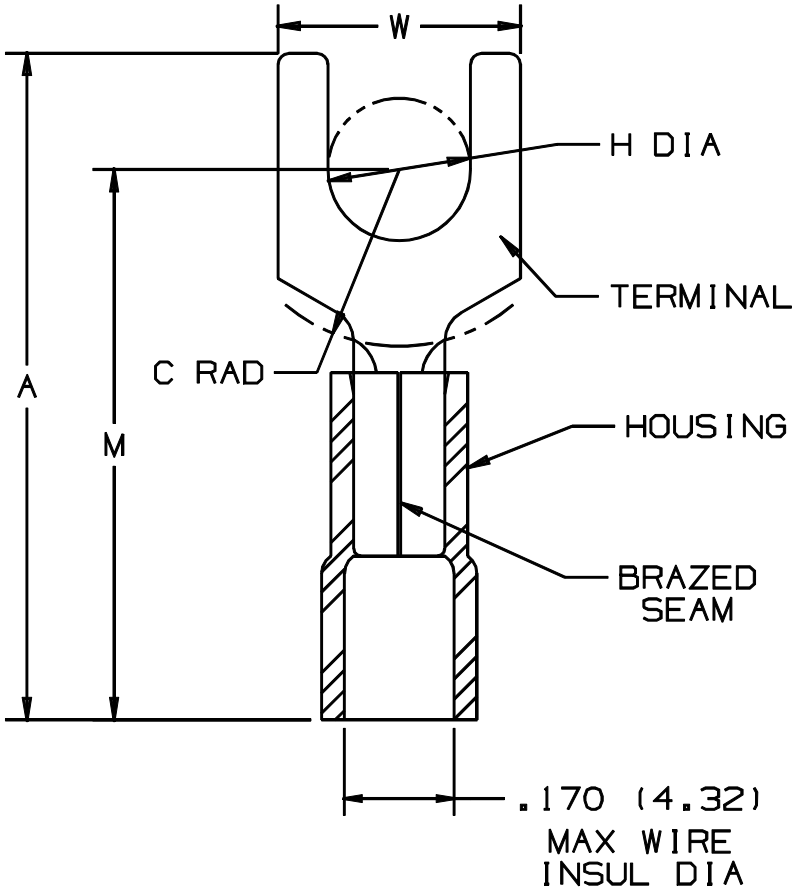

NOTES :

1. UL LISTED AND CSA CERTIFIED FOR:
   A. 600 V MAX. VOLTAGE RATING
   B. 221°F (105°C) MAX. TEMP. RATING
   C. #22-18 AWG SOLID OR STRANDED, COPPER WIRE
2. PACKAGE QTY.: STD C=100
   BULK M=1000
3. MATERIAL:
   A. STAMPING - .032 (.81) THK COPPER, TIN PLATED
   B. HOUSING - RED VINYL
4. WIRE STRIP LENGTH: $5/16\ ^{+1/32}_{-00}$ $(7.94\ ^{+.80}_{-.00})$
5. DIMENSIONS IN BRACKETS ARE IN MILLIMETERS
6. INSTALLATION TOOLS:
   A. UL AND CSA APPROVED: CT-100, CT-500*, CT-550*
   B. PANDUIT APPROVED: CT-160, CT-260
   * APRROVED FOR EXPANDED WIRE RANGE #22-16 AWG

LISTED 587H E52164

CERTIFIED LR31212

A41459_03

REV	DATE	BY	CHK	DESCRIPTION	QA	CUST	PM	ECN#
03	1/01	RM		FILESPEC WAS NPC-A41459-02				
02	3/91	DL		TANG WIDTH INCREASED PART NO PV18-6FX, PV18-8FX, PV18-10FX				00403
--	--	--	--	REDRAWN ON CAD WITH REVISIONS	--	--	--	

PANDUIT CORP. TINLEY PARK, ILLINOIS

#22-18 BARREL VINYL INSULATED FORK .170 MAX WIRE INSUL DIA

DRAWN BY	CHK'D	SCALE	DRAWING NO.
DRL		NONE	A41459