Chipsmall Limited consists of a professional team with an average of over 10 year of expertise in the distribution of electronic components. Based in Hongkong, we have already established firm and mutual-benefit business relationships with customers from,Europe,America and south Asia,supplying obsolete and hard-to-find components to meet their specific needs.

With the principle of “Quality Parts,Customers Priority,Honest Operation,and Considerate Service”,our business mainly focus on the distribution of electronic components. Line cards we deal with include Microchip,ALPS,ROHM,Xilinx,Pulse,ON,Everlight and Freescale. Main products comprise IC,Modules,Potentiometer,IC Socket,Relay,Connector.Our parts cover such applications as commercial,industrial, and automotives areas.

We are looking forward to setting up business relationship with you and hope to provide you with the best service and solution. Let us make a better world for our industry!

Contact us

Tel: +86-755-8981 8866 Fax: +86-755-8427 6832
Email & Skype: info@chipsmall.com Web: www.chipsmall.com
Address: A1208, Overseas Decoration Building, #122 Zhenhua RD., Futian, Shenzhen, China

NOTES:

1.0 SPECIFICATIONS:

- 1.1 FREQUENCY RANGE: 0.5 to 2.0 GHz
- 1.2 INSERTION LOSS: 1.0dB MAX. WHEN REFERENCED TO 6dB POWER DIVISION.
- 1.3 AMPLITUDE UNBALANCE: 0.5dB MAX.
- 1.4 PHASE BALANCE: 10° MAX.
- 1.5 VSWR: 1.50:1 MAX.
- 1.6 ISOLATION: 18dB MIN.
- 1.7 INPUT POWER: 4.0 WATTS MAX.

2.0 FINISH:

GREY OVER MIL-E-15090 TYPE II, CLASS 2
OVER MIL-C-5541 CLASS 3A
MEETS MIL-F-14072
MEETS MIL-E-5400

3.0 MARKING:

MARK UNIT AS SHOWN
(REF.: SLK-08124-82-01)

4.0 DIMENSIONS IN PARENTHESIS ARE IN MILLIMETERS

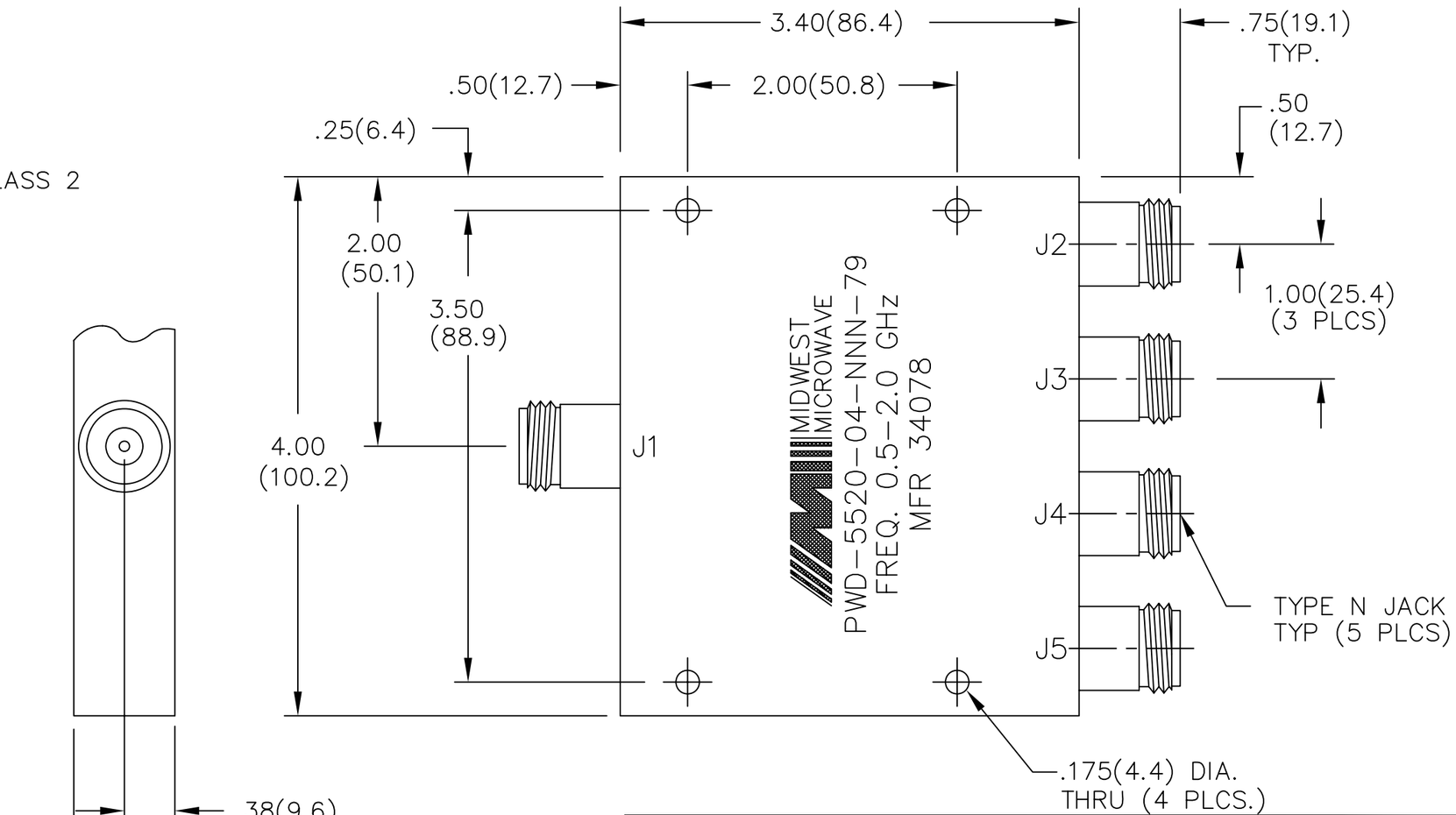

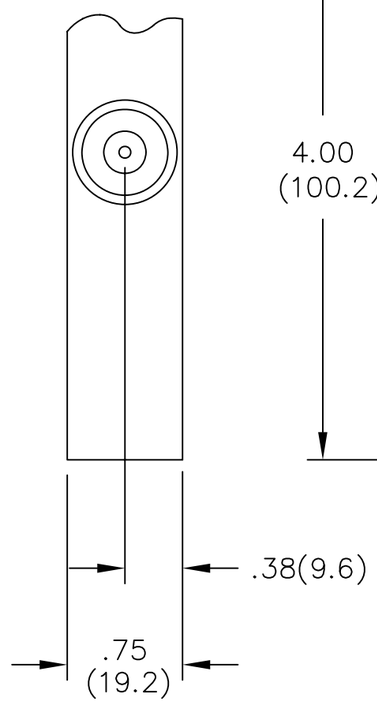

MODEL NUMBER	REV.
PWD-5520-04-NNN-79	A

REV.	DESCRIPTION	DATE
–	RELEASED	11/8/94
A	ECN 19155	4/17/03

UNLESS OTHERWISE NOTED DIMENSIONS ARE IN INCHES AND TOLERANCES ARE:

3 PLACE DECIMALS ±.005
2 PLACE DECIMALS ±.02
FRACTIONS ±1/64
PARALLELITY: T.I.R. _____
FLATNESS: T.I.R. _____
CONCENTRICITY: T.I.R. _____
ANGLES AND PERPENDICULARITY: ±1°

FSCM NO. 34078 *MIDWEST MICROWAVE*

NOTICE: The information contained in this drawing is proprietary and must not be used without the permission of Midwest Microwave

TITLE: POWER DIVIDER TYPE N (4-WAY)

DRAWN/DATE	ENG./DATE	DRAWING NUMBER
A.BEATTY 11/7/94	J.O'NEIL 11/7/94	PWD-5520-04-NNN-79
CHECKED/DATE	APPROVED/DATE	SCALE: 1=1 SHEET 1 of 1