Chipsmall Limited consists of a professional team with an average of over 10 year of expertise in the distribution of electronic components. Based in Hongkong, we have already established firm and mutual-benefit business relationships with customers from,Europe,America and south Asia,supplying obsolete and hard-to-find components to meet their specific needs.

With the principle of “Quality Parts,Customers Priority,Honest Operation,and Considerate Service”,our business mainly focus on the distribution of electronic components. Line cards we deal with include Microchip,ALPS,ROHM,Xilinx,Pulse,ON,Everlight and Freescale. Main products comprise IC,Modules,Potentiometer,IC Socket,Relay,Connector.Our parts cover such applications as commercial,industrial, and automotives areas.

We are looking forward to setting up business relationship with you and hope to provide you with the best service and solution. Let us make a better world for our industry!

Contact us

Tel: +86-755-8981 8866 Fax: +86-755-8427 6832
Email & Skype: info@chipsmall.com Web: www.chipsmall.com
Address: A1208, Overseas Decoration Building, #122 Zhenhua RD., Futian, Shenzhen, China

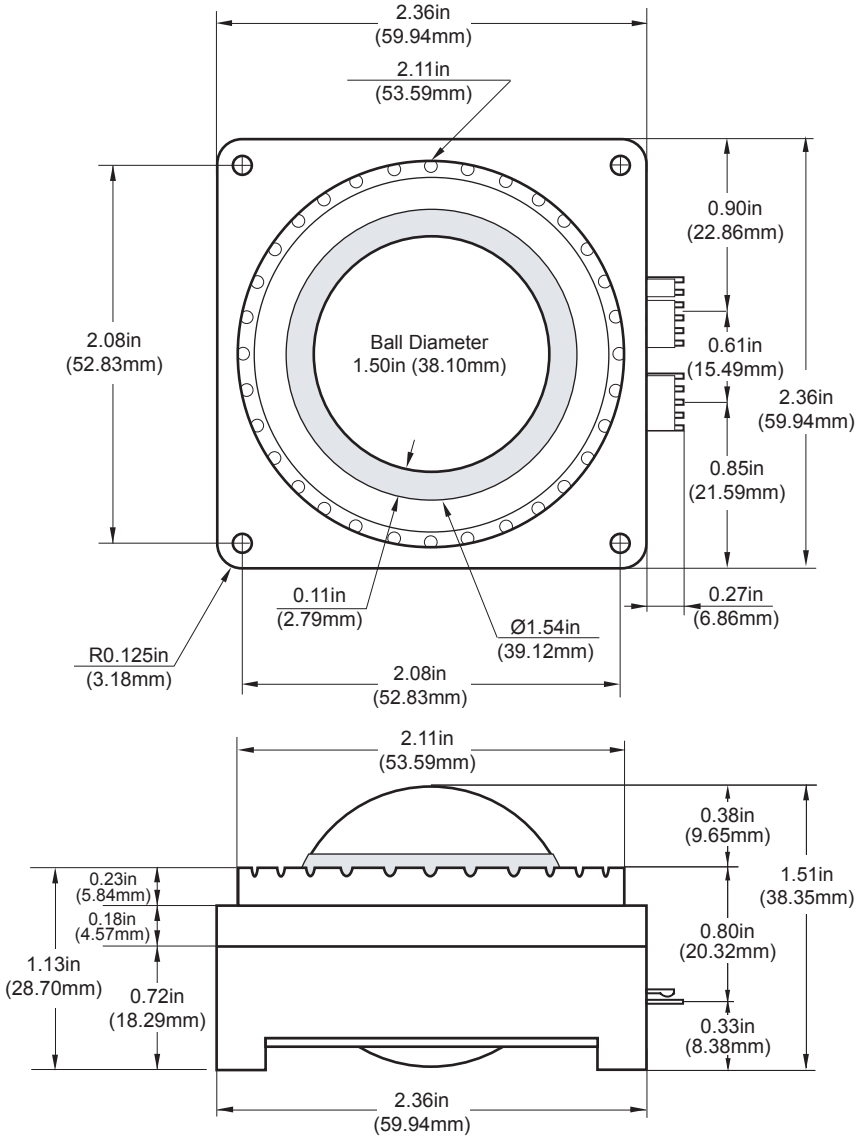

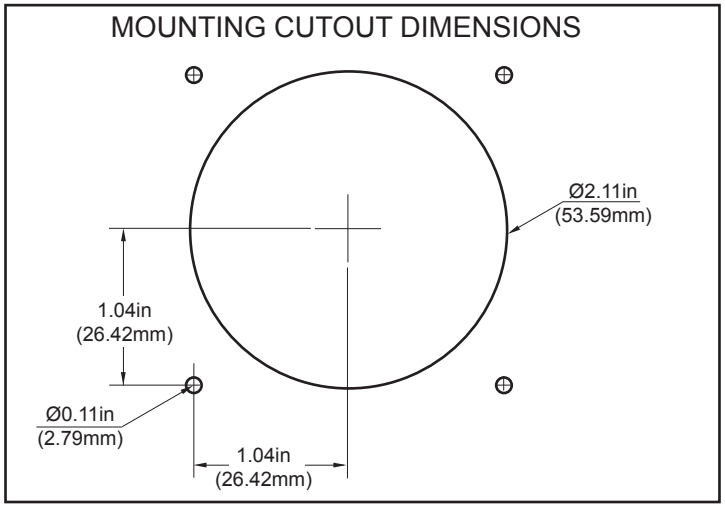

SPECIFICATIONS

ELECTRICAL

USB

INPUT:	5V @ 25mA max (+30mA for backlit illumination)
OUTPUT:	USB 1.1

MECHANICAL

BALL DIAMETER:	1.5”
BALL ROTATION:	Continuous
BALL COLOR/ILLUMINATION:	Blue
TRACKING FORCE:	15g
WEIGHT	33.5g
LIFE CYCLE (BALL ROTATIONS):	5 Million

RoHS compliant

CH Products

P/N **R1507F20V00-B** REV **A**

DESCRIPTION
R150-1.5” USB Trackball with Removable Bezel, Illuminated, Blue

PROPRIETARY AND CONFIDENTIAL
THE INFORMATION CONTAINED IN THIS DRAWING IS THE SOLE PROPERTY OF CH PRODUCTS. ANY REPRODUCTION IN PART OR AS WHOLE WITHOUT THE WRITTEN PERMISSION OF CH PRODUCTS IS PROHIBITED.