Chipsmall Limited consists of a professional team with an average of over 10 year of expertise in the distribution of electronic components. Based in Hongkong, we have already established firm and mutual-benefit business relationships with customers from,Europe,America and south Asia,supplying obsolete and hard-to-find components to meet their specific needs.

With the principle of “Quality Parts,Customers Priority,Honest Operation,and Considerate Service”,our business mainly focus on the distribution of electronic components. Line cards we deal with include Microchip,ALPS,ROHM,Xilinx,Pulse,ON,Everlight and Freescale. Main products comprise IC,Modules,Potentiometer,IC Socket,Relay,Connector.Our parts cover such applications as commercial,industrial, and automotives areas.

We are looking forward to setting up business relationship with you and hope to provide you with the best service and solution. Let us make a better world for our industry!

Contact us

Tel: +86-755-8981 8866 Fax: +86-755-8427 6832
Email & Skype: info@chipsmall.com Web: www.chipsmall.com
Address: A1208, Overseas Decoration Building, #122 Zhenhua RD., Futian, Shenzhen, China

Cat. No. I553-E1-01

OMRON

USER'S MANUAL

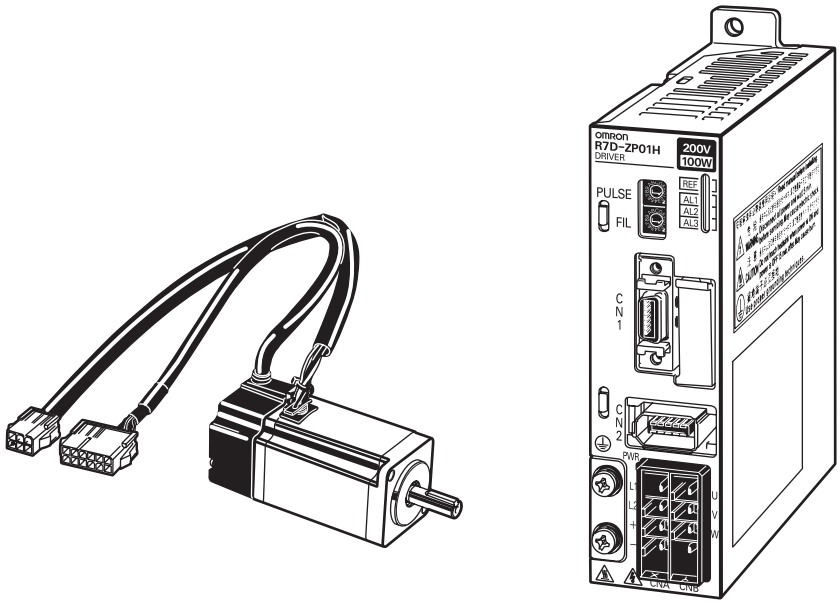

SMARTSTEP Junior

MODELS R7M-Z□ (Servomotors)
R7D-ZP□ (Servo Drivers)

Servomotors/Servo Drivers

SMARTSTEP Junior

Supplemental Information On Wiring

OMRON Corporation Cat. No. I553-E1-01

Thank you for your continued support of OMRON products.
The information provided in this document is being provided to supplement the information on wiring via a XW2B-series Terminal Block Conversion Unit when connecting a SMARTSTEP Junior Servo Driver to a Controller. The original information is insufficient, so please use this document along with the manual.

■ Using a Terminal Block Conversion Unit

A Terminal Block Conversion Unit can be used when connecting to a general-purpose Controller. This document describes the Unit models and provides cable specifications and wiring examples.

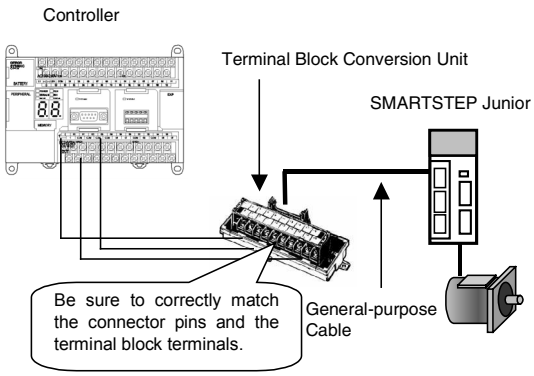

● Conversion Unit Models

Any of the following three models of 20-pole Conversion Units can be used as required by the application.

XW2B-20G4

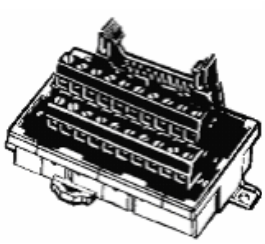

XW2B-20G5

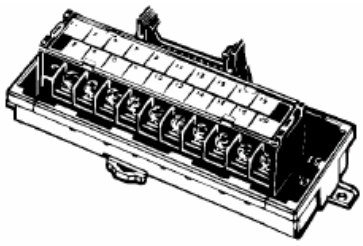

XW2D-20G6

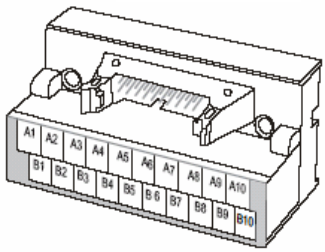

● Cable Specifications

Use one of the following cables to connect the Connector Terminal Block Unit to the control I/O connector (CN1) on the Servo Driver.

Model	Length (L)	Outer diameter of sheath	Weight
XW2Z-100J-B19	1 m	8 dia.	Approx. 0.1 kg
XW2Z-200J-B19	2 m		Approx. 0.2 kg

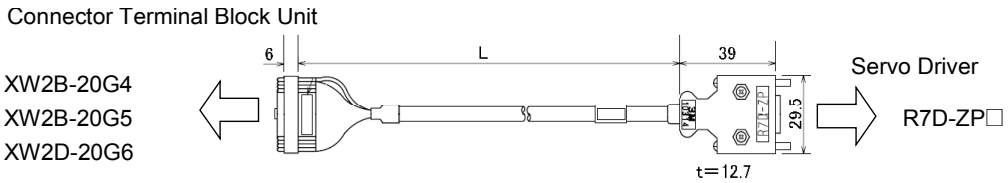

● Servo Driver Wiring

The following diagram shows the correspondences between signal names and terminal numbers.

Terminal block | Connector | Servo Driver

Symbol	No.	No.	No.	Wire/mark colors	Symbol
+24VIN	1	1	5	Blue/Red (-)	+24VIN
	2	2			
+24VIN	3	3			
	4	4			
+24VIN	5	5			
	6	6			
+CW/PULS	7	7	1	Pink/Red (-)	+CW/PULS
-CW/PULS	8	8	2	Pink/Black (-)	-CW/PULS
+CCW/SIGN	9	9	3	Green/Red (-)	+CCW/SIGN
-CCW/SIGN	10	10	4	Green/Black (-)	-CCW/SIGN
+ECRST	11	11	8	Orange/Red (-)	+ECRST
-ECRST	12	12	9	Orange/Black (-)	-ECRST
Z	13	13	10	Gray/Red (-)	Z
ZCOM	14	14	11	Gray/Black (-)	ZCOM
RUN	15	15	6	Blue/Red (--)	RUN
0GND	16	16	7	Blue/Black (--)	0GND
BKIR	17	17	13	Pink/Red (--)	BKIR
INP	18	18	14	Pink/Black (--)	INP
ALM	19	19	12	Green/Red (--)	ALM
Shield	20	20	Shell	Shield	FG

Connector at Terminal Block Conversion Unit
Connector Socket: X4GM-2030
Strain Relief: XG4T-5004

Cable
AWG28 × 10P, UL 20276

Servo Driver Connector
Connector plug: 10114-3000PE (Sumitomo 3M)
Connector case: 10314-52A0-008 (Sumitomo 3M)

● Controller Wiring (XW2B-20G4/20G5 and XW2D-20G6)

• Using Line-driver Position Command Pulse and Deviation Counter Reset Inputs

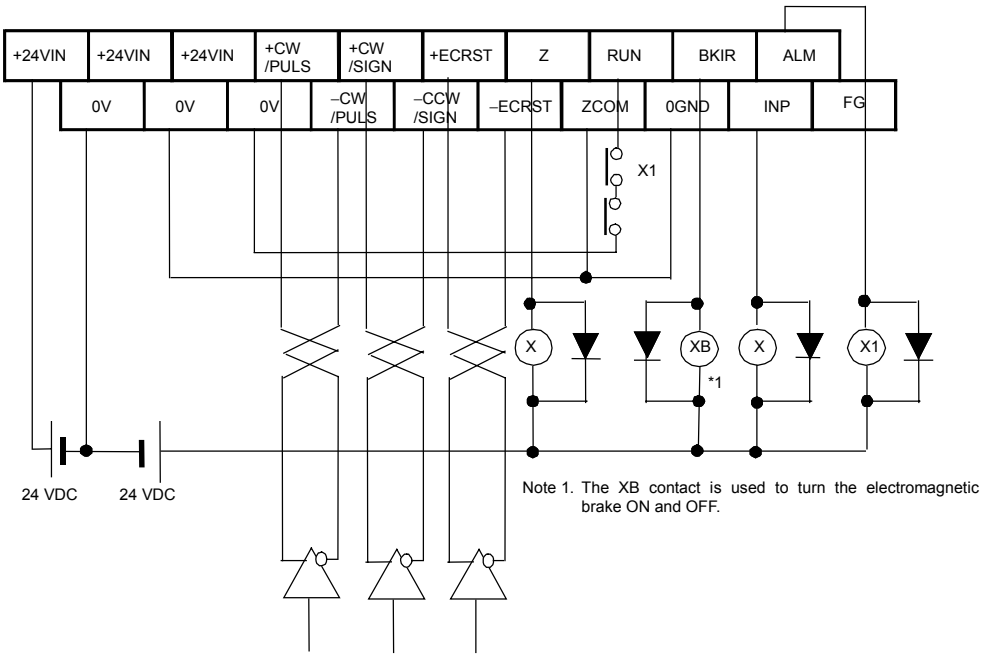

Note 1. The XB contact is used to turn the electromagnetic brake ON and OFF.

• **Using Open-collector Position Command Pulse and Deviation Counter Reset Inputs**

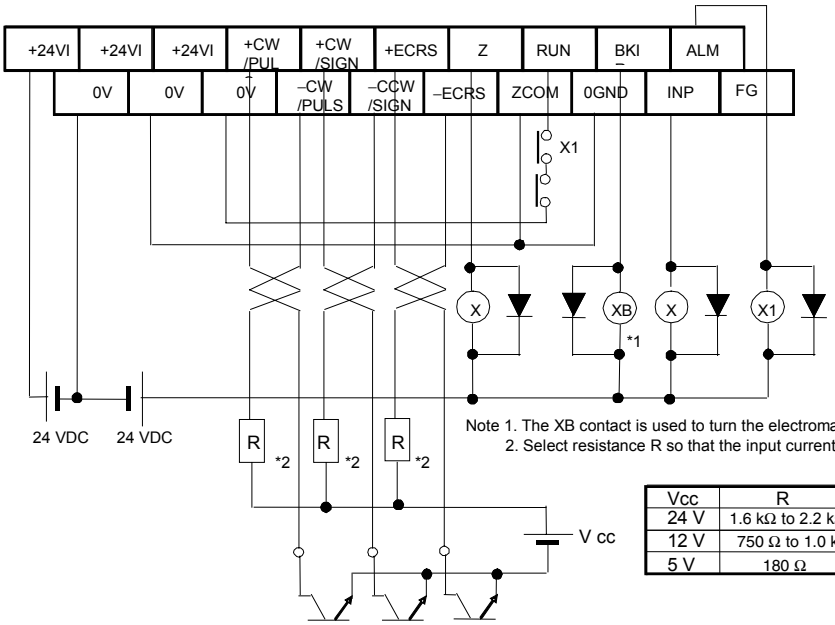

Note 1. The XB contact is used to turn the electromagnetic brake ON and OFF.
2. Select resistance R so that the input current will be from 7 to 15 mA.

Vcc	R
24 V	1.6 kΩ to 2.2 kΩ
12 V	750 Ω to 1.0 kΩ
5 V	180 Ω

● Wiring to a CP1H-series Controller

Connecting to the SYSMAC CP1H-X20DT-D

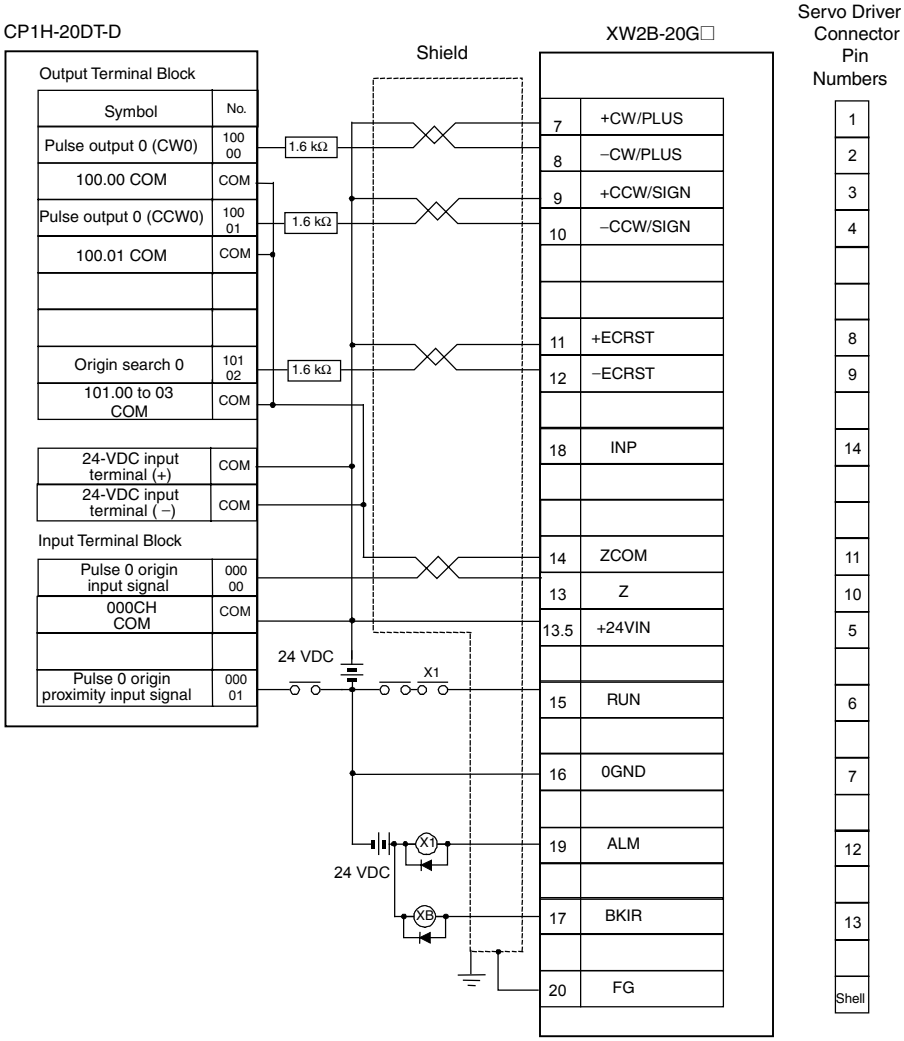

Connecting to the SYSMAC CP1H-Y20DT-D

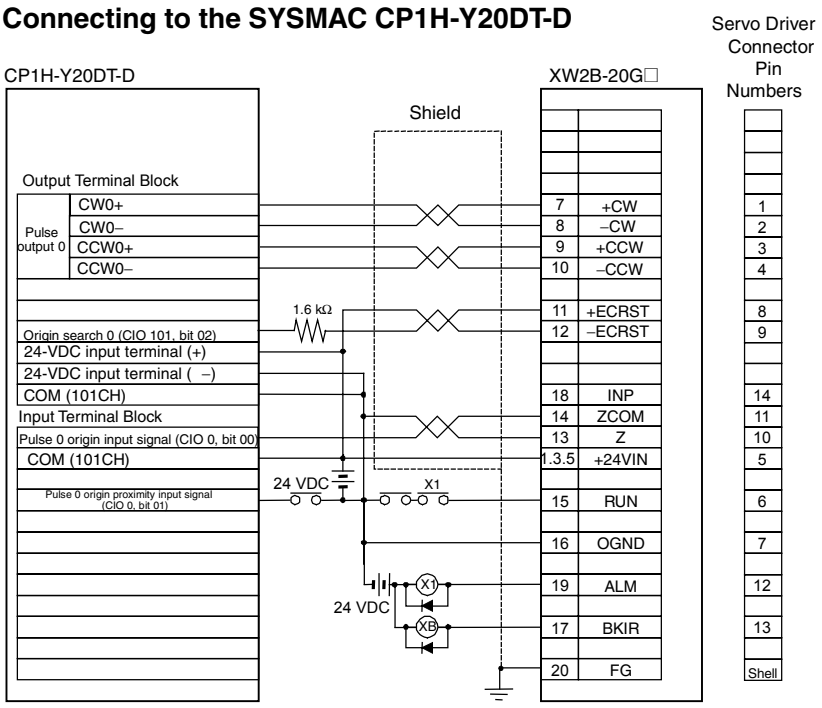

■ Using Servo Relay Units

A Servo Relay Unit can be used when connecting to the Controllers listed in the following table. Refer to this table to select the Controller Cable. If there is more than one terminal block plate (the nameplate with the signal names) provided with the Servo Relay Unit, use the one for SMARTSTEP and wire the terminals correctly.

Controller	Cable connecting to the Controller	Servo Relay Unit	Cable connecting to the Servo Driver
C200H-NC112	XW2Z-□□□J-A4	XW2B-20J6-1B	XW2Z-□□□J-B17
C200HW-NC113 CS1W-NC113	XW2Z-□□□J-A8		
CS1W-NC133	XW2Z-□□□J-A12		
CJ1W-NC113	XW2Z-□□□J-A16		
CJ1W-NC133	XW2Z-□□□J-A20		
3F88M-DRT141	XW2Z-□□□J-A25		
C200H-NC211	XW2Z-□□□J-A5	XW2B-40J6-2B	
C200HW-NC213/413 CS1W-NC213/413	XW2Z-□□□J-A9		
CS1W-NC233/433	XW2Z-□□□J-A13		
CJ1W-NC213/413	XW2Z-□□□J-A17		
CJ1W-NC233/433	XW2Z-□□□J-A21		
CQM1-CPU43-V1 CQM1H-PLB21	XW2Z-□□□J-A3	XW2B-20J6-3B	
CJIM-CPU21 CJIM-CPU22 CJIM-CPU23	XW2Z-□□□J-A26	XW2B-20J6-8A	
		XW2B-40J6-9A (for 2-axis connection)	

Thank you for choosing this SMARTSTEP Junior product.

This manual provides information on installation, wiring, and switch setting for the SMARTSTEP Junior Servomotors and Servo Drivers. For information about troubleshooting, refer to the *SMARTSTEP Junior User's Manual* (Cat. No. I553).

■ Intended Audiences

This manual is intended for the following personnel, who must also have knowledge of electrical systems (an electrical engineer or the equivalent).

- Personnel in charge of installing FA systems
- Personnel in charge of designing FA systems
- Personnel in charge of managing FA systems and facilities

■ NOTICE

This manual contains information necessary for the operation of the SMARTSTEP Junior Servomotors and Servo Drivers. Please read this manual thoroughly and understand its contents before attempting to operate the product. Please keep this manual handy for future reference after reading it.

Be sure that this manual accompanies the product to its final user.

Read and Understand this Manual

Please read and understand this manual before using the product. Please consult your OMRON representative if you have any questions or comments.

Warranty and Limitations of Liability

WARRANTY
OMRON's exclusive warranty is that the products are free from defects in materials and workmanship for a period of one year (or other period if specified) from date of sale by OMRON. OMRON MAKES NO WARRANTY OR REPRESENTATION, EXPRESS OR IMPLIED, REGARDING NON-INFRINGEMENT, MERCHANTABILITY, OR FITNESS FOR PARTICULAR PURPOSE OF THE PRODUCTS. ANY BUYER OR USER ACKNOWLEDGES THAT THE BUYER OR USER ALONE HAS DETERMINED THAT THE PRODUCTS WILL SUITABLY MEET THE REQUIREMENTS OF THEIR INTENDED USE. OMRON DISCLAIMS ALL OTHER WARRANTIES, EXPRESS OR IMPLIED.

LIMITATIONS OF LIABILITY
OMRON SHALL NOT BE RESPONSIBLE FOR SPECIAL, INDIRECT, OR CONSEQUENTIAL DAMAGES, LOSS OF PROFITS OR COMMERCIAL LOSS IN ANY WAY CONNECTED WITH THE PRODUCTS, WHETHER SUCH CLAIM IS BASED ON CONTRACT, WARRANTY, NEGLIGENCE, OR STRICT LIABILITY. In no event shall the responsibility of OMRON for any act exceed the individual price of the product on which liability is asserted. IN NO EVENT SHALL OMRON BE RESPONSIBLE FOR WARRANTY, REPAIR, OR OTHER CLAIMS REGARDING THE PRODUCTS UNLESS OMRON'S ANALYSIS CONFIRMS THAT THE PRODUCTS WERE PROPERLY HANDLED, STORED, INSTALLED, AND MAINTAINED AND NOT SUBJECT TO CONTAMINATION, ABUSE, MISUSE, OR INAPPROPRIATE MODIFICATION OR REPAIR.

Application Considerations

SUITABILITY FOR USE

OMRON shall not be responsible for conformity with any standards, codes, or regulations that apply to the combination of products in the customer's application or use of the products.

At the customer's request, OMRON will provide applicable third party certification documents identifying ratings and limitations of use that apply to the products. This information by itself is not sufficient for a complete determination of the suitability of the products in combination with the end product, machine, system, or other application or use.

The following are some examples of applications for which particular attention must be given. This is not intended to be an exhaustive list of all possible uses of the products, nor is it intended to imply that the uses listed may be suitable for the products:

- Outdoor use, uses involving potential chemical contamination or electrical interference, or conditions or uses not described in this manual.
- Nuclear energy control systems, combustion systems, railroad systems, aviation systems, medical equipment, amusement machines, vehicles, safety equipment, and installations subject to separate industry or government regulations.
- Systems, machines, and equipment that could present a risk to life or property.

Please know and observe all prohibitions of use applicable to the products.

NEVER USE THE PRODUCTS FOR AN APPLICATION INVOLVING SERIOUS RISK TO LIFE OR PROPERTY WITHOUT ENSURING THAT THE SYSTEM AS A WHOLE HAS BEEN DESIGNED TO ADDRESS THE RISKS, AND THAT THE OMRON PRODUCTS ARE PROPERLY RATED AND INSTALLED FOR THE INTENDED USE WITHIN THE OVERALL EQUIPMENT OR SYSTEM.

PROGRAMMABLE PRODUCTS

OMRON shall not be responsible for the user's programming of a programmable product, or any consequence thereof.

Disclaimers

CHANGE IN SPECIFICATIONS

Product specifications and accessories may be changed at any time based on improvements and other reasons.

It is our practice to change model numbers when published ratings or features are changed, or when significant construction changes are made. However, some specifications of the products may be changed without any notice. When in doubt, special model numbers may be assigned to fix or establish key specifications for your application on your request. Please consult with your OMRON representative at any time to confirm actual specifications of purchased products.

DIMENSIONS AND WEIGHTS

Dimensions and weights are nominal and are not to be used for manufacturing purposes, even when tolerances are shown.

PERFORMANCE DATA

Performance data given in this manual is provided as a guide for the user in determining suitability and does not constitute a warranty. It may represent the result of OMRON's test conditions, and the users must correlate it to actual application requirements. Actual performance is subject to the OMRON Warranty and Limitations of Liability.

ERRORS AND OMISSIONS

The information in this manual has been carefully checked and is believed to be accurate; however, no responsibility is assumed for clerical, typographical, or proofreading errors, or omissions.

General Warnings

To ensure safe and proper use of SMARTSTEP Junior Servomotors and Servo Drivers, read the general warnings provided below along with the rest of this manual to gain sufficient knowledge of the devices, safety information, and precautions before actual use.

This OPERATION MANUAL is to be delivered to the actual end users of the products.

Please keep this manual close at hand for future reference.

The following conventions are used to indicate and classify precautions in this manual. Always heed the information provided with them. Failure to heed precautions can result in injury to people or damage to property.

⚠ **WARNING**	Indicates a potentially hazardous situation which, if not avoided, could result in death or serious injury. Additionally, there may be severe property damage.

⚠ **Caution**	Indicates a potentially hazardous situation which, if not avoided, may result in minor or moderate injury, or property damage.

General Warnings

- This manual may include illustrations of the product with protective covers or shields removed in order to describe the components of the product in detail. Make sure that these protective covers and shields are on the product before use.
- Consult your OMRON representative when using the product after a long period of storage.

⚠ WARNING

⚠ **WARNING**	Always connect the frame ground terminals of the Servo Driver and the Servomotor to a class-3 ground (to 100 Ω or less). Not connecting to a class-3 ground may result in electric shock.
⚠ **WARNING**	Do not touch the inside of the Servo Driver. Doing so may result in electric shock.
⚠ **WARNING**	Do not remove the front cover, terminal covers, cables, or optional items while the power is being supplied. Doing so may result in electric shock.
⚠ **WARNING**	Installation, operation, maintenance, or inspection must be performed by authorized personnel. Not doing so may result in electric shock or injury.
⚠ **WARNING**	Wiring or inspection must not be performed for at least five minutes after turning OFF the power supply. Doing so may result in electric shock.
⚠ **WARNING**	Do not damage, press, or put excessive stress or heavy objects on the cables. Doing so may result in electric shock.
⚠ **WARNING**	Do not touch the rotating parts of the Servomotor in operation. Doing so may result in injury.
⚠ **WARNING**	Do not modify the product. Doing so may result in injury or damage to the product.
⚠ **WARNING**	Provide a stopping mechanism on the machine to ensure safety. The holding brake is not designed as a stopping mechanism for safety purposes.
⚠ **WARNING**	Provide an external emergency stopping mechanism that can stop operation and shutting off the power supply immediately. Not doing so may result in injury.
⚠ **WARNING**	Do not come close to the machine immediately after resetting momentary power interruption to avoid an unexpected restart. (Take appropriate measures to secure safety against an unexpected restart.) Doing so may result in injury.

⚠ CAUTION

⚠ **Caution**	Use the Servomotors and Servo Drivers in a specified combination. Using them incorrectly may result in fire or damage to the products.
	Do not store or install the product in the following places. Doing so may result in fire, electric shock, or damage to the product • Locations subject to direct sunlight. • Locations subject to temperatures or humidity outside the range specified in the specifications. • Locations subject to condensation as the result of severe changes in temperature. • Locations subject to corrosive or flammable gases. • Locations subject to dust (especially iron dust) or salts. • Locations subject to shock or vibration. • Locations subject to exposure to water, oil, or chemicals.
⚠ **Caution**	Do not touch the Servo Driver radiator, Servo Driver regeneration resistor, or Servomotor while the power is being supplied or soon after the power is turned OFF. Doing so may result in a skin burn due to the hot surface.

Storage and Transportation Precautions

⚠ CAUTION

⚠ **Caution**	Do not hold the product by the cables or motor shaft while transporting it. Doing so may result in injury or malfunction.
⚠ **Caution**	Do not place any load exceeding the figure indicated on the product. Doing so may result in injury or malfunction.

Installation and Wiring Precautions

⚠ CAUTION

⚠ **Caution**	Do not step on or place a heavy object on the product. Doing so may result in injury.
⚠ **Caution**	Do not cover the inlet or outlet ports and prevent any foreign objects from entering the product. Doing so may result in fire.
⚠ **Caution**	Be sure to install the product in the correct direction. Not doing so may result in malfunction.
⚠ **Caution**	Provide the specified clearances between the Servo Driver and the control panel or with other devices. Not doing so may result in fire or malfunction.
⚠ **Caution**	Do not apply any strong impact. Doing so may result in malfunction.
⚠ **Caution**	Be sure to wire correctly and securely. Not doing so may result in motor runaway, injury, or malfunction.
⚠ **Caution**	Be sure that all the mounting screws, terminal screws, and cable connector screws are tightened to the torque specified in the relevant manuals. Incorrect tightening torque may result in malfunction.
⚠ **Caution**	Use crimp terminals for wiring. Do not connect bare stranded wires directly to terminals. Connection of bare stranded wires may result in burning.
⚠ **Caution**	Always use the power supply voltage specified in the *User's Manual*. An incorrect voltage may result in malfunction or burning.
⚠ **Caution**	Take appropriate measures to ensure that the specified power with the rated voltage and frequency is supplied. Be particularly careful in places where the power supply is unstable. An incorrect power supply may result in malfunction.
⚠ **Caution**	Install external breakers and take other safety measures against short-circuiting in external wiring. Insufficient safety measures against short-circuiting may result in burning.
⚠ **Caution**	Take appropriate and sufficient countermeasures when installing systems in the following locations. Failure to do so may result in damage to the product. • Locations subject to static electricity or other forms of noise. • Locations subject to strong electromagnetic fields and magnetic fields. • Locations subject to possible exposure to radioactivity. • Locations close to power supplies.

Operation and Adjustment Precautions

⚠ CAUTION

⚠ **Caution**	Confirm that no adverse effects will occur in the system before performing the test operation. Not doing so may result in equipment damage.
⚠ **Caution**	Check the newly set parameters and switches for proper execution before actually running them. Not doing so may result in equipment damage.
⚠ **Caution**	Do not make any extreme adjustments or setting changes. Doing so may result in unstable operation and injury.
⚠ **Caution**	Separate the Servomotor from the machine, check for proper operation, and then connect to the machine. Not doing so may cause injury.
⚠ **Caution**	When an alarm occurs, remove the cause, reset the alarm after confirming safety, and then resume operation. Not doing so may result in injury.
⚠ **Caution**	Do not use the built-in brake of the Servomotor for ordinary braking. Doing so may result in malfunction.
⚠ **Caution**	Do not operate the Servomotor connected to a load that exceeds the applicable load moment of inertia. Doing so may result in malfunction.

Maintenance and Inspection Precautions

⚠ CAUTION

⚠ **WARNING**	Do not attempt to disassemble, repair, or modify any Units. Any attempt to do so may result in malfunction, fire, or electric shock.
⚠ **Caution**	Resume operation only after transferring to the new Unit the contents of the data required for operation. Not doing so may result in an unexpected operation.

■ Warning Labels

Warning labels are pasted on the product as shown in the following illustration. Be sure to follow the instructions given there.

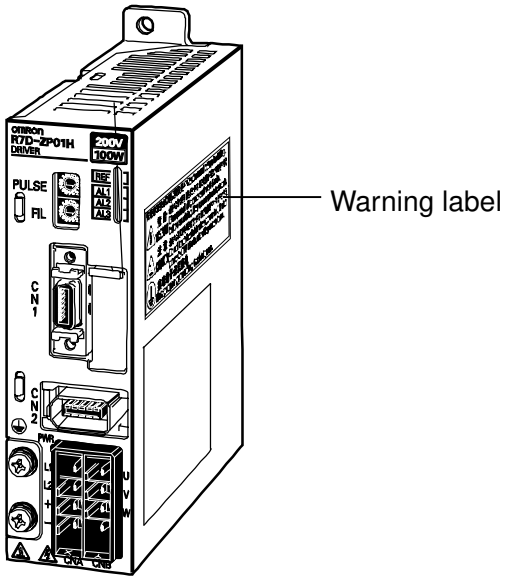

Example from R7D-ZP01H

■ Warning Label Contents

Read manual before installing. / 安装前请务必熟读使用说明书
据付の前に必ず取扱説明書を熟読のこと

WARNING Disconnect all power and wait 5 min. before servicing. May cause electric shock.
危 险 通电中以及切断电源后的5分钟内，请勿触摸端子部位！有触电的危险。
危 険 通電中および電源オフ後、5分間端子部に触るな！感電の恐れあり。

CAUTION Do not touch heatsink when power is ON and power is OFF 15 min. after. May cause burn.
注 意 通电中以及切断电源后的15分钟内，请勿触摸散热片！有烫伤的危险！
通電中および電源オフ後、15分間ヒートシンクに触るな！火傷の恐れあり！

Use proper grounding techniques.
接地端子必须接地
必ずアース線を接続せよ

Items to Check When Unpacking

Check the following items after removing the product from the package.

Item	Method
Has the correct product been delivered?	Check the model number on the nameplate on the side of the product.
Has the product been damaged in shipping?	Inspect the outside of the product and carefully check that there has been no damage during shipping.

- Accessories

  1. Special screw driver for setting the rotary switch × 1

  2. Safety Precautions document × 1

  No connectors or mounting screws are provided. Obtain these separately.

  If something is missing, the Servo Driver is damaged, or some other fault exists, please contact the point of purchase or your OMRON representative.

- Interpreting the Model Number

  The model number provides information such as the Servo Driver type, the applicable Servomotor capacity, and the power supply voltage.

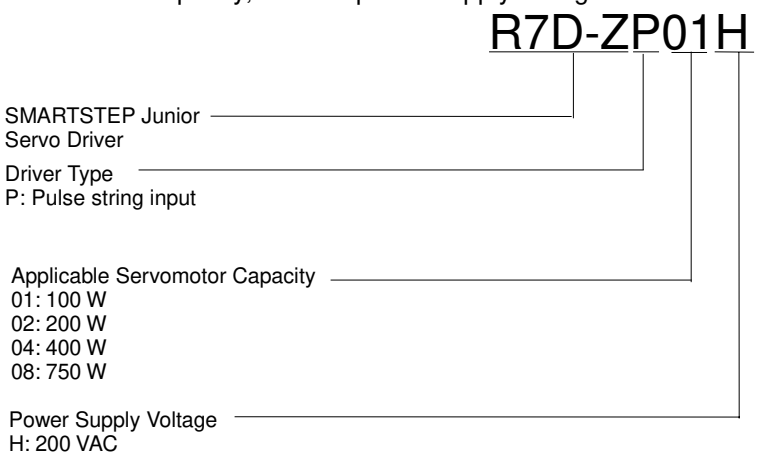

- Servo Driver and Servomotor Combinations

Rated output	Servomotor		Servo Driver
	Without brake	With brake	Pulse string input
100 W	R7M-Z10030-S1	R7M-Z10030-B S1	R7D-ZP01H
200 W	R7M-Z20030-S1	R7M-Z20030-B S1	R7D-ZP02H
400 W	R7M-Z40030-S1	R7M-Z40030-B S1	R7D-ZP04H
750 W	R7M-Z75030-S1	R7M-Z75030-B S1	R7D-ZP08H

Contents

Section 6 Troubleshooting

Appendix

Section 1

Features and System Configuration

1-1 Introduction

1-1-1 Introduction

The SMARTSTEP Junior is a Servo Driver with a pulse-string input for position control. The SMARTSTEP Junior is easy to set up and start because it does not require the complex parameter settings and Servo adjustments normally associated with Servos.

The SMARTSTEP Junior Servomotor and Servo Driver are easy-to-use, yet provide the responsiveness, high-speed, high-torque, and precision of traditional Servo systems.

This manual describes the SMARTSTEP Junior as a pulse-string input Servo Driver for position control.

1-1-2 SMARTSTEP Junior Features

The SMARTSTEP Junior has the following features.

■ No Setup Parameters

No parameter settings are required for setup, so you can start using the Servo Driver immediately simply by removing it from the box and wiring it. If it is necessary to set the positioning resolution or reference pulse method, these settings can be set or changed easily with the rotary switches on the front of the Servo Driver.

■ No Servo Adjustments Required

With the newest auto-tuning function, it isn’t necessary to adjust the Servo Driver to achieve excellent responsiveness. Auto-tuning achieves excellent responsiveness while providing compatibility with a range of stepping motors. A Servomotor with moderate inertia is used to improve control system stability.

1-2 System Configuration

SYSMAC PLC + Position Control Unit with pulse-string output

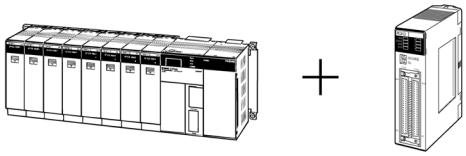

SYSMAC
CJ1/CS1/C-series
Programmable Controller

Position Control Unit
CJ1W-NC113/213/413
CJ1W-NC133/233/433
CS1W-NC113/213/413
CS1W-NC133/233/433
C200HW-NC113/213/413

Pulse string

SYSMAC PLC with pulse output functions

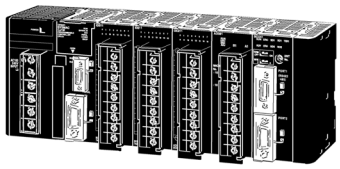

SYSMAC CJ1M

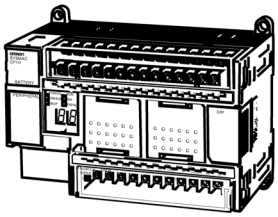

SYSMAC CP1H

Flexible Motion Controller with pulse I/O

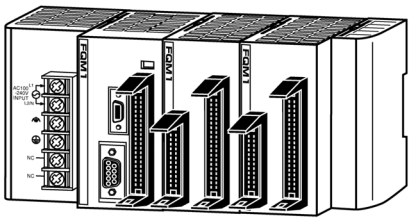

FQM1－MMP21

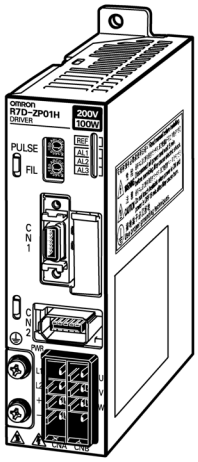

SMARTSTEP Junior Servo Driver
R7D-ZP□

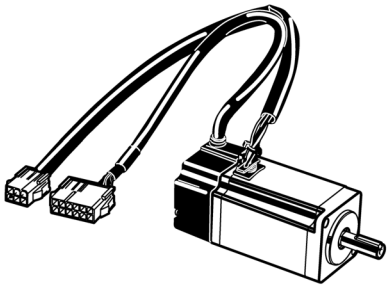

SMARTSTEP Junior Servomotor
R7M-Z□

1-3 Nomenclature and Functions

1-3-1 Servo Driver Nomenclature and Functions

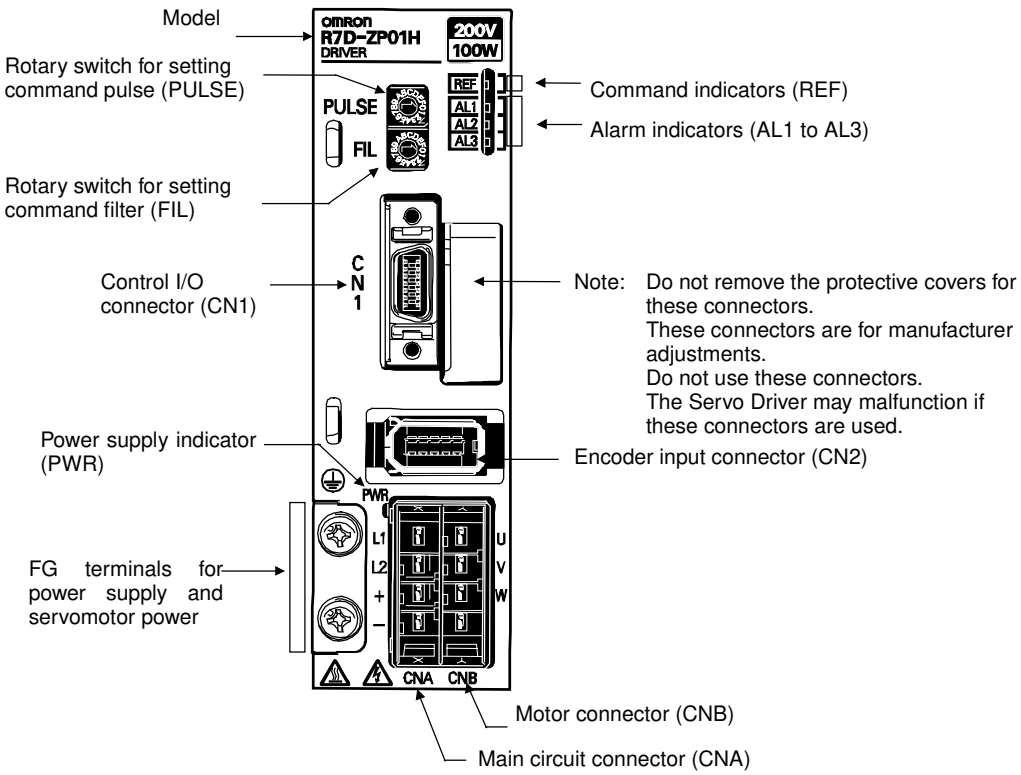

■ Rotary Switch for Setting Command Pulse (PULSE)

Always turn OFF the power supply before setting the rotary switch. (The switch is factory-set to 0.)

Setting	Command pulse resolution	Command pulse connection method	Command pulse type
0	1000	Open collector or line driver	CW+CCW, positive logic CW CCW
1	2500		
2	5000	Line driver	
3	10000		
4	1000	Open collector or line driver	CW+CCW, negative logic CW CCW
5	2500		
6	5000	Line driver	
7	10000		
8	1000	Open collector or line driver	Sign + pulse string, positive logic PULS SIGN
9	2500		
A	5000	Line driver	
B	10000		
C	1000	Open collector or line driver	Sign + pulse string, negative logic PULS SIGN
D	2500		
E	5000	Line driver	
F	10000		