Chipsmall Limited consists of a professional team with an average of over 10 year of expertise in the distribution of electronic components. Based in Hongkong, we have already established firm and mutual-benefit business relationships with customers from,Europe,America and south Asia,supplying obsolete and hard-to-find components to meet their specific needs.

With the principle of “Quality Parts,Customers Priority,Honest Operation,and Considerate Service”,our business mainly focus on the distribution of electronic components. Line cards we deal with include Microchip,ALPS,ROHM,Xilinx,Pulse,ON,Everlight and Freescale. Main products comprise IC,Modules,Potentiometer,IC Socket,Relay,Connector.Our parts cover such applications as commercial,industrial, and automotives areas.

We are looking forward to setting up business relationship with you and hope to provide you with the best service and solution. Let us make a better world for our industry!

Contact us

Tel: +86-755-8981 8866 Fax: +86-755-8427 6832
Email & Skype: info@chipsmall.com Web: www.chipsmall.com
Address: A1208, Overseas Decoration Building, #122 Zhenhua RD., Futian, Shenzhen, China

版数 REV.	年月日 DATE	DCN NO.	変更内容 DESCRIPTION	製図 DR.	担当 CHK.	査閲 APPD.	承認 APPD.

図面番号(DRAWING NO.) SJ101854

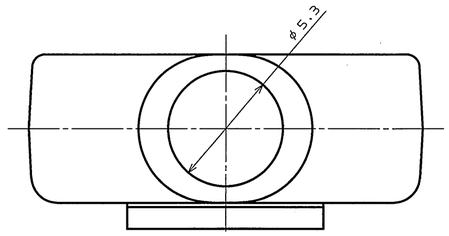

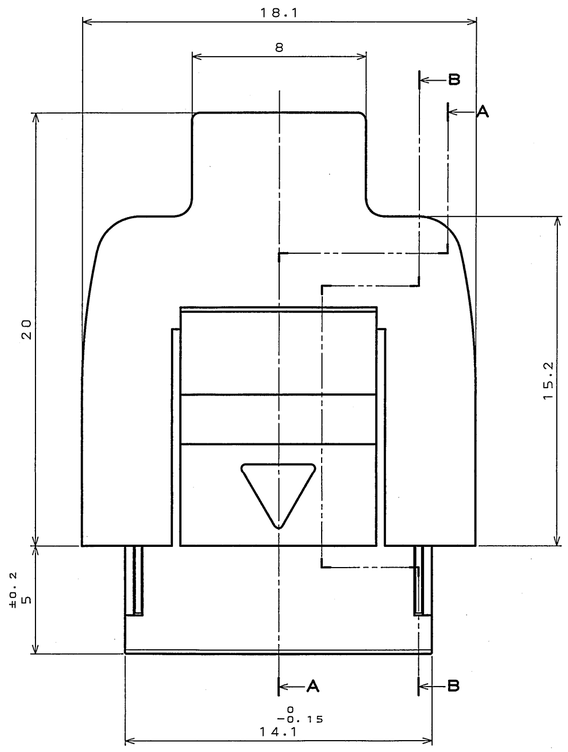

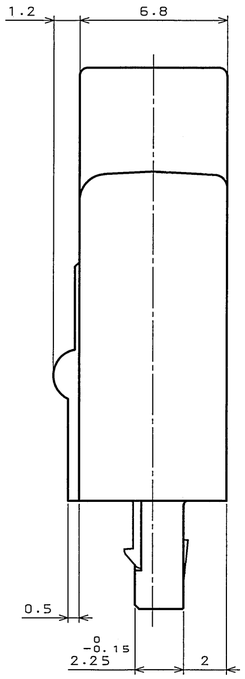

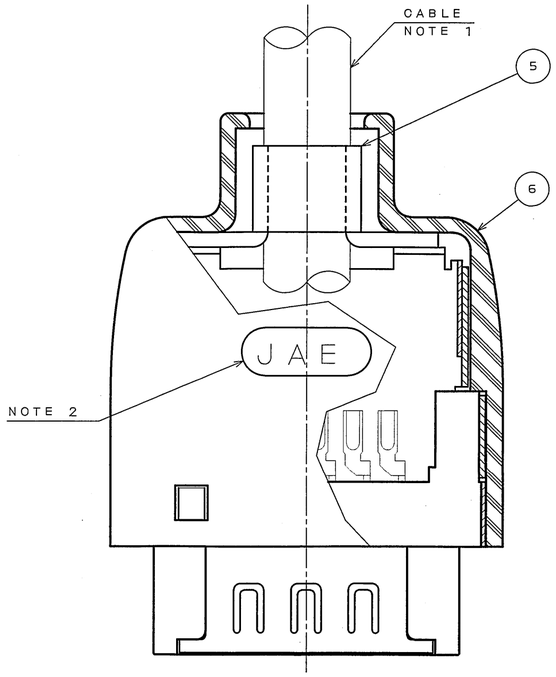

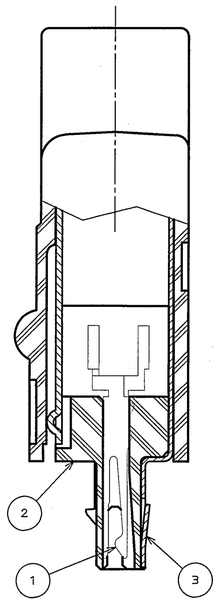

断面A－A

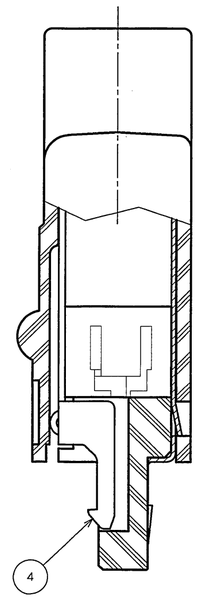

断面B－B

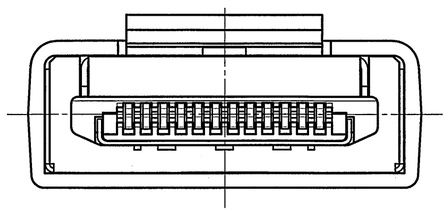

NOTE 1. AN OUTER DIAMETER OF THE APPLICABLE CABLE IS SHOWN BELOW:

PART NUMBER	OUTER DIAMETER OF THE APPLICABLE CABLE
RL01-P12S-C4E	φ4±0.2
RL01-P12S-C5E	φ5±0.2

2. COMPANY LOGO "JAE" IS MARKED AS INDICATED.
3. THE CONNECTING AREA IS PLATED WITH GOLD OVER Pd-NI OVER NICKEL.
   THE TERMINAL AREA IS PLATED WITH Au FLASH.
4. THE INSULATOR ASSEMBLED WITH CONTACT IS SUPPLIED. THE OTHER PARTS ARE ATTACHED.

1. 品名により、適合ケーブル仕上り外径が異なる。

品名	適合ケーブル仕上り外径
RL01-P12S-C4E	φ4±0.2
RL01-P12S-C5E	φ5±0.2

2. 図示の位置に「社標」が表示される。
3. 接触部は、ニッケル上パラジウムニッケル上金メッキ　結線部は、Auフラッシュメッキである。
4. コンタクトは、インシュレータに組込まれた状態で納入される。
   その他の部品は、バラの状態で納入される。

符号 NO.	名称 DESCRIPTION	個数 QTY.	材料 MATERIAL	仕上 FINISH	備考 REMARKS
6	HOOD	1	PC	(BLACK)	UL94V-0
5	CLAMP BARREL	1	COPPER ALLOY	NICKEL PLATING	
4	BACK SHELL COVER	1	STAINLESS STEEL	――	
3	BACK SHELL BASE	1	STAINLESS STEEL	――	
2	INSULATOR	1	GLASS FILLED NY	(BLACK)	UL94V-0
1	CONTACT	12	COPPER ALLOY	NOTE 3	

仕様書(SPECIFICATION) JACS-3157

第1版(ORIGINAL DATE) 15.Oct.2004

一般公差(GENERAL TOLERANCE)

寸法(DIMENSION)	角度(ANGLES)
. ±0.5	X° ±
.X ±0.5	X°X' ±
.XX ±	
.XXX ±	

製図 DR.
担当 CHK. Y.SAITOU
査閲 APPD. ――
承認 APPD. J. Nakata

尺度(SCALE) 5:1
シリーズ(SERIES) RL
名称(TITLE) RL01-P12S-C※E
質量(MASS)

日本航空電子工業株式会社
JAPAN AVIATION ELECTRONICS INDUSTRY, LTD.

図面番号(DRAWING NO.) SJ101854
版数(REV.) 1
SIZE A2

JAE CONNECTOR.COM
Reference Only

DOF-0-213E(03.08)

0 10 20 30 40 50 60 70 80 90 100

LEAD FREE この製品は鉛フリー品です

JAE CONNECTOR DIV. PROPRIETARY.
COPYRIGHT (C) 2004, JAPAN AVIATION ELECTRONICS INDUSTRY, LTD.