Chipsmall Limited consists of a professional team with an average of over 10 year of expertise in the distribution of electronic components. Based in Hongkong, we have already established firm and mutual-benefit business relationships with customers from,Europe,America and south Asia,supplying obsolete and hard-to-find components to meet their specific needs.

With the principle of “Quality Parts,Customers Priority,Honest Operation,and Considerate Service”,our business mainly focus on the distribution of electronic components. Line cards we deal with include Microchip,ALPS,ROHM,Xilinx,Pulse,ON,Everlight and Freescale. Main products comprise IC,Modules,Potentiometer,IC Socket,Relay,Connector.Our parts cover such applications as commercial,industrial, and automotives areas.

We are looking forward to setting up business relationship with you and hope to provide you with the best service and solution. Let us make a better world for our industry!

Contact us

Tel: +86-755-8981 8866 Fax: +86-755-8427 6832
Email & Skype: info@chipsmall.com Web: www.chipsmall.com
Address: A1208, Overseas Decoration Building, #122 Zhenhua RD., Futian, Shenzhen, China

図面番号(DRAWING NO.) SJ101861

版数 REV.	年月日 DATE	DCN NO.	変更内容 DESCRIPTION	製図 DR.	担当 CHK.	査閲 APPD.	承認 APPD.

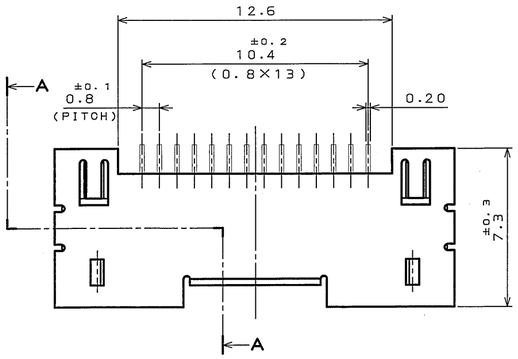

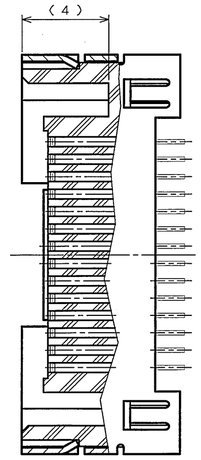

SECT. B-B

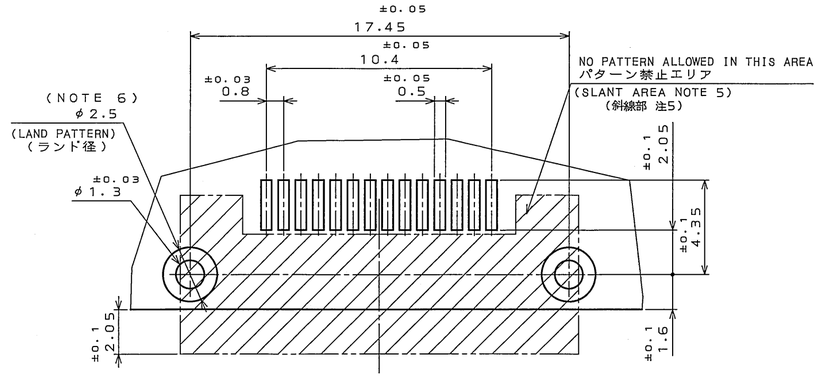

APPLICABLE P.C.B. DIMENSION(REF.)

適合基板寸法(参考)

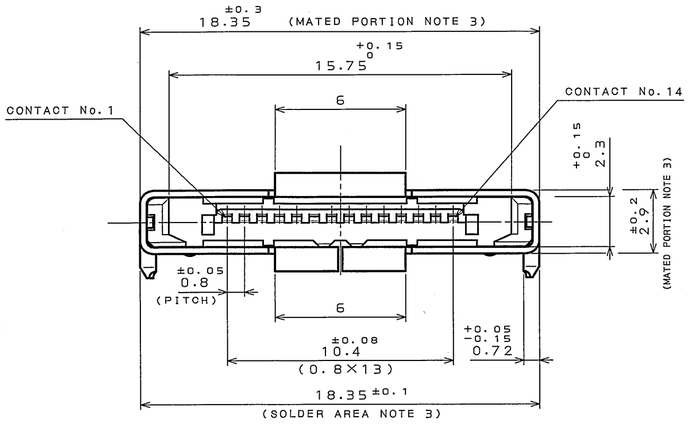

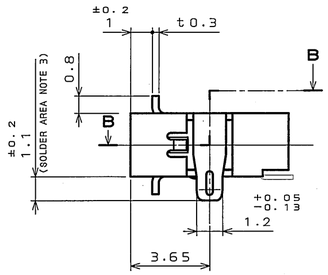

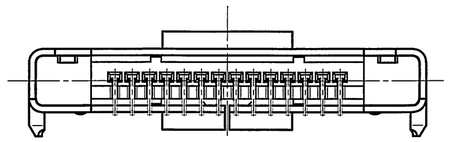

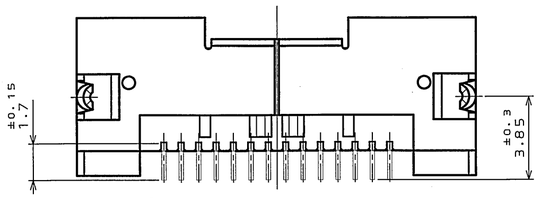

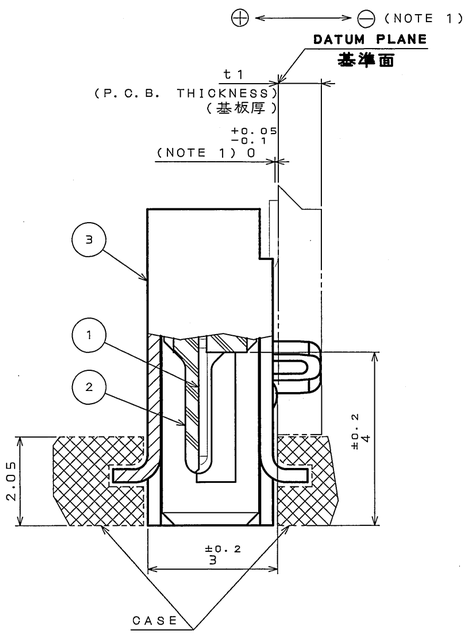

SECT. A-A

(SCALE 10:1)

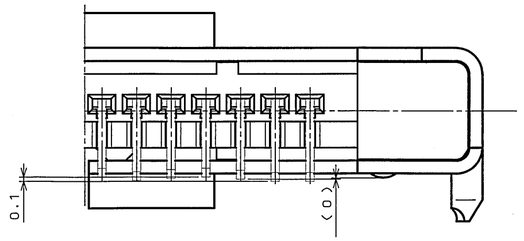

SMT TERMINAL DIMENSION

(NOTE 1)

NOTE 1. ⊕ AND ⊖ DENOTE ARE DIRECTION OF SMT TOLERANCE.
TERMINAL DIMENSION IS $0^{+0.05}_{-0.1}$, AND DEVIATION
(DIMENSION BETWEEN MINUS VALUE & PLUS VALUE)
SHALL BE 0.1 MAX.

2. THE CONNECTING AREA IS PLATED WITH GOLD OVER
Pd-NI OVER NICKEL.
THE TERMINAL AREA IS PLATED WITH Au FLASH.

3. THE DIMENSION OF $18.35^{\pm0.3}$ IS AT THE MATING AREA ($2.9^{\pm0.2}$).
THE DIMENSION OF $18.35^{\pm0.1}$ IS AT THE SOLDER AREA ($1.1^{\pm0.2}$).

4. THE SHEARED EDGES OF CONNECTOR SHELL AT THE SOLDER AREA
ARE NOT PLATING.

5. PLEASE NO PATTERNING IN SLANT AREA.

6. LAND MARK BOTH SIDES OF P.C.B.
HOLE OF φ1.3 IS THROUGH HOLE PLATED.

1. SMT公差部のプラス、マイナスの方向を示す。端子寸法は$0^{+0.05}_{-0.1}$であり、公差内に
おけるバラツキ(1コネクタ内のMAX値とMIN値の差)は、0.1以下とする。

2. 接触部はニッケル上パラジウムニッケル上金メッキ、SMT部はAuフラッシュメッキである。

3. "$18.35^{\pm0.3}$"は嵌合部($2.9^{\pm0.2}$)における寸法である。又、"$18.35^{\pm0.1}$"は
半田付部($1.1^{\pm0.2}$)における寸法である。

4. 本コネクタシェル半田付部 破断面には、メッキは施されません。

5. 本斜線部にはパターンを配線しないよう願います。

6. ランドは基板の両面に設けること。又、φ1.3の穴はスルーホールメッキであること。

符号 NO.	名称 DESCRIPTION	個数 QTY.	材料 MATERIAL	仕上 FINISH	備考 REMARKS
3	SHELL	1	STAINLESS STEEL	SOLDER AREA PLATED (NOTE 4) WITH (LEAD FREE)TIN/TIN ALLOY	
2	INSULATOR	1	PPS		UL94 V-0
1	CONTACT	14	COPPER ALLOY	NOTE 2	

仕様書(SPECIFICATION) JACS-3157

第1版(ORIGINAL DATE) 15.Oct.2004

尺度(SCALE) 5:1

シリーズ(SERIES) RL

名称(TITLE) RL01-R14PE

日本航空電子工業株式会社
JAPAN AVIATION ELECTRONICS INDUSTRY, LTD.

図面番号(DRAWING NO.) SJ101861

版数(REV.) 1

SIZE A2

製図 DR.

担当 CHK. Y.SAITOU

査閲 APPD. —

承認 APPD. Y. Kubota

質量(MASS)

一般公差(GENERAL TOLERANCE)

寸法(DIMENSION)	角度(ANGLES)
. ±0.8	X° ±
.X ±0.4	X°X' ±
.XX ±0.1	
.XXX ±	

JAE CONNECTOR.COM
Reference Only

LEAD FREE この製品は鉛フリー品です

JAE CONNECTOR DIV. PROPRIETARY.
COPYRIGHT (C) 2004, JAPAN AVIATION ELECTRONICS INDUSTRY, LTD.

DOF-0-213E(03.08)