Chipsmall Limited consists of a professional team with an average of over 10 year of expertise in the distribution of electronic components. Based in Hongkong, we have already established firm and mutual-benefit business relationships with customers from,Europe,America and south Asia,supplying obsolete and hard-to-find components to meet their specific needs.

With the principle of “Quality Parts,Customers Priority,Honest Operation,and Considerate Service”,our business mainly focus on the distribution of electronic components. Line cards we deal with include Microchip,ALPS,ROHM,Xilinx,Pulse,ON,Everlight and Freescale. Main products comprise IC,Modules,Potentiometer,IC Socket,Relay,Connector.Our parts cover such applications as commercial,industrial, and automotives areas.

We are looking forward to setting up business relationship with you and hope to provide you with the best service and solution. Let us make a better world for our industry!

Contact us

Tel: +86-755-8981 8866 Fax: +86-755-8427 6832
Email & Skype: info@chipsmall.com Web: www.chipsmall.com
Address: A1208, Overseas Decoration Building, #122 Zhenhua RD., Futian, Shenzhen, China

版数 REV.	年月日 DATE	DCN NO.	変更内容 DESCRIPTION	製図 DR.	担当 CHK.	査閲 APPD.	承認 APPD.

図面番号(DRAWING NO.) SJ101874

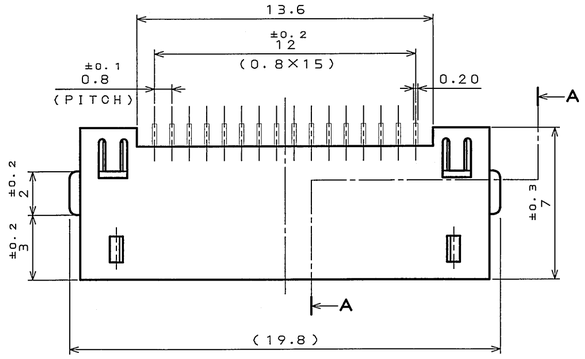

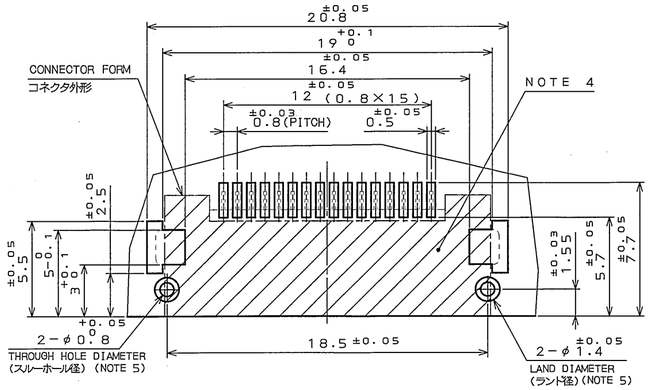

APPLICABLE P.C.B. DIMENSION(REF.)
適合基板寸法(参考)

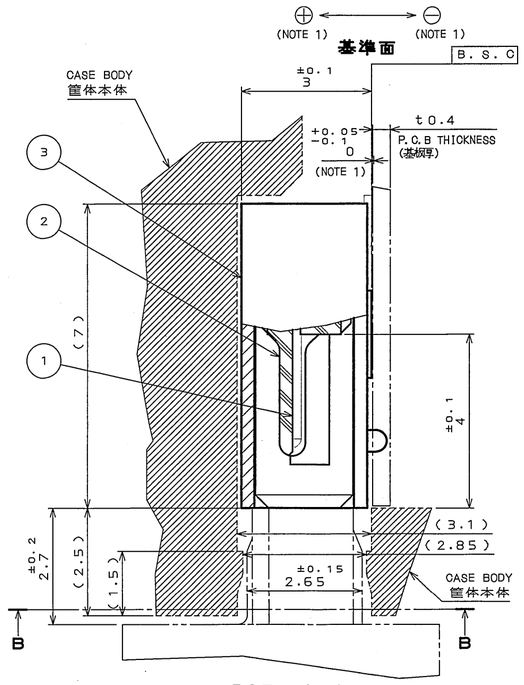

SECT. A−A
(SCALE 10:1)

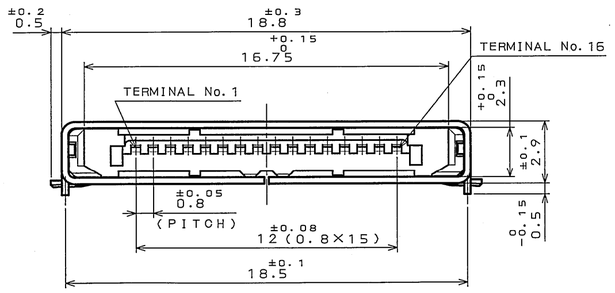

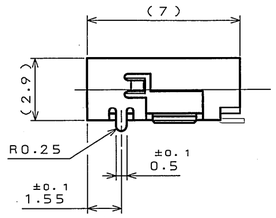

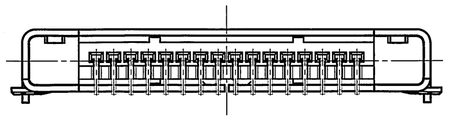

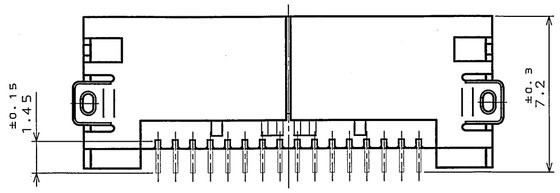

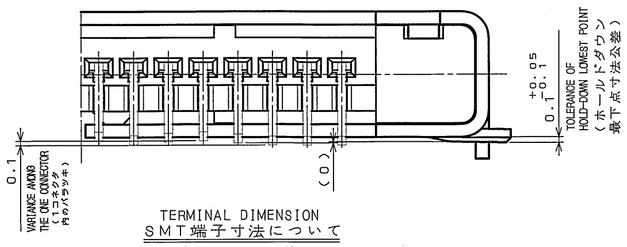

TERMINAL DIMENSION
SMT端子寸法について
(NOTE 1)

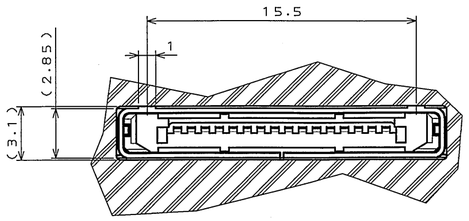

SECT. B−B

NOTE 1. THIS SHOWS THE PLUS OR MINUS DIRECTION OF SMT TOLERANCE.
THE TERMINAL DIMENSION IS $0^{+0.05}_{-0.1}$, AND THE VARIANCE WITHIN THE TOLERANCE
(THE DIFFERENCE BETWEEN MAXIMUM VALUE AND MINIMUM VALUE) SHALL BE 0.1mm MAX.
2. THE CONNECTING AREA IS PLATED WITH GOLD OVER PALLADIUM-NI OVER NICKEL.
THE TERMINAL AREA IS Au FLASH.
3. THIS SMT SHARED AREA OF THIS CONNECTOR SHELL IS NOT PLATED.
4. THE PATTERN SHOULD NOT BE LAID IN THIS SHADED AREA.
5. THE LAND SHALL BE PROVIDED AT BOTH FACES OF THE PC BOARD.
THE 0.8 DIAMETER HOLE IS THROUGH-HOLE PLATED.

注1. SMT公差部のプラス、マイナスの方向を示す。
端子寸法は$0^{+0.05}_{-0.1}$であり、公差内におけるバラツキ
(1コネクタ内のMAX値とMIN値の差)は、0.1以下とする。
2. 接触部は、ニッケル上パラジウムニッケル上金メッキ
SMT部は、Auフラッシュメッキである。
3. 本コネクタシェルSMT部破断面には、メッキは施されません。
4. 本斜線部にはパターンを配線しないよう願います。
5. ランドは基板の両面に設けること。又、φ0.8の穴はスルーホールメッキであること。

符号 NO.	名称 DESCRIPTION	個数 QTY.	材料 MATERIAL	仕上 FINISH	備考 REMARKS
3	SHELL	1	STAINLESS STEEL	SOLDER AREA:TIN/TIN ALLOY PLATING(LEAD FREE) (NOTE 3)	
2	INSULATOR	1	PPS	――	UL94 V−0
1	CONTACT	16	COPPER ALLOY	NOTE 2	

仕様書(SPECIFICATION) JACS−3163
第1版(ORIGINAL DATE) 15.Oct.2004
尺度(SCALE) 5:1
シリーズ(SERIES) RL
製図 DR.
担当 CHK. Y.SAITOU
査閲 APPD. ――
承認 APPD. J.Kubota
名称(TITLE) RL01S−R16P−SE
質量(MASS)
一般公差(GENERAL TOLERANCE)
寸法(DIMENSION): . ±0.8 / .X ±0.4 / .XX ±0.1 / .XXX±
角度(ANGLES): X° ± / X°X'±
日本航空電子工業株式会社 JAPAN AVIATION ELECTRONICS INDUSTRY, LTD.
図面番号(DRAWING NO.) SJ101874
版数(REV.) 1
SIZE A2

JAE-CONNECTOR.COM
Reference only

DOF-0-213E(03.08)

0 10 20 30 40 50 60 70 80 90 100

LEAD FREE この製品は鉛フリー品です

JAE CONNECTOR DIV. PROPRIETARY.
COPYRIGHT (C) 2004, JAPAN AVIATION ELECTRONICS INDUSTRY, LTD.