Chipsmall Limited consists of a professional team with an average of over 10 year of expertise in the distribution of electronic components. Based in Hongkong, we have already established firm and mutual-benefit business relationships with customers from,Europe,America and south Asia,supplying obsolete and hard-to-find components to meet their specific needs.

With the principle of “Quality Parts,Customers Priority,Honest Operation,and Considerate Service”,our business mainly focus on the distribution of electronic components. Line cards we deal with include Microchip,ALPS,ROHM,Xilinx,Pulse,ON,Everlight and Freescale. Main products comprise IC,Modules,Potentiometer,IC Socket,Relay,Connector.Our parts cover such applications as commercial,industrial, and automotives areas.

We are looking forward to setting up business relationship with you and hope to provide you with the best service and solution. Let us make a better world for our industry!

Contact us

Tel: +86-755-8981 8866 Fax: +86-755-8427 6832
Email & Skype: info@chipsmall.com Web: www.chipsmall.com
Address: A1208, Overseas Decoration Building, #122 Zhenhua RD., Futian, Shenzhen, China

RSE116626

REV	ECN	APP'D
K	2949	JR 11/30/98
L	6750	JR 10/4/11

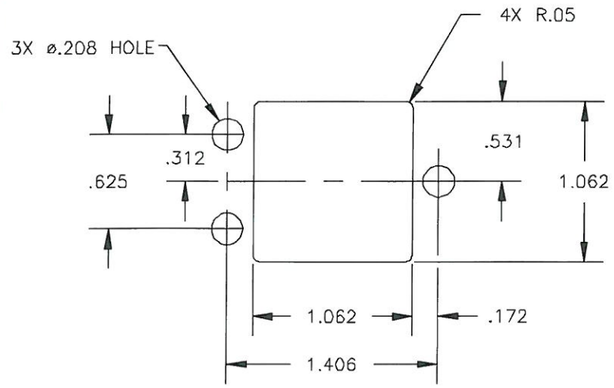

RECOMMENDED MOUNTING PANEL HOLE

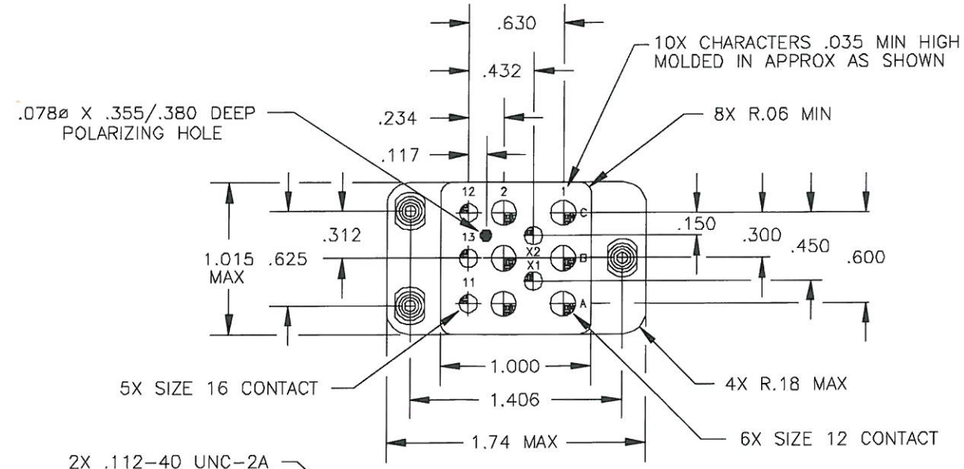

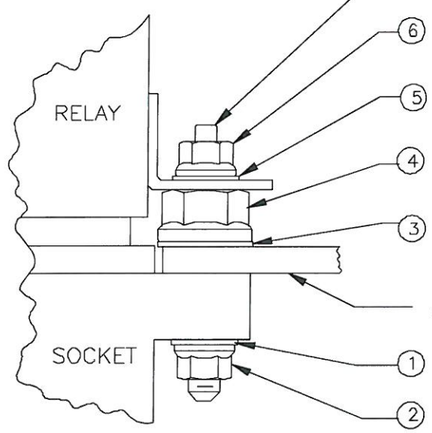

MOUNTING HARDWARE

INSTALLATION SEQUENCE BY ITEM NUMBER
TYP 3 PLACES

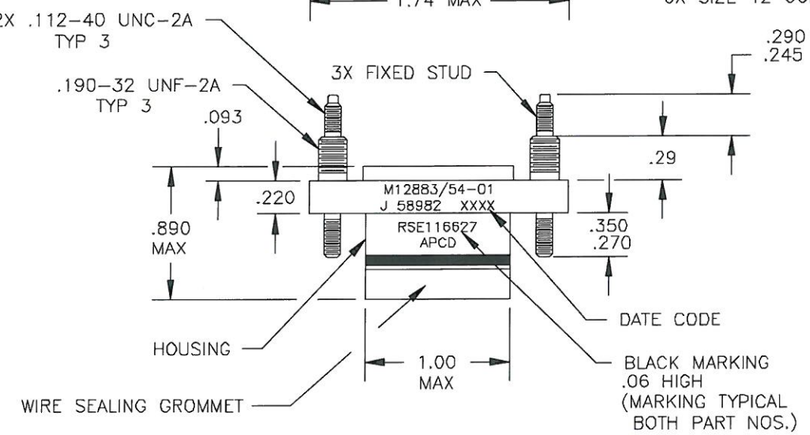

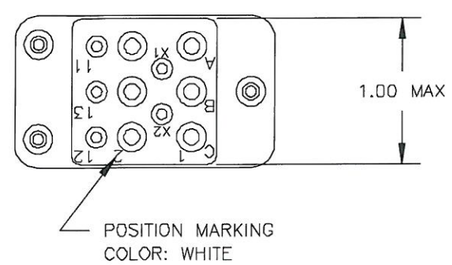

NOTES:
1. CONFORMS TO PERFORMANCE REQUIREMENTS OF MIL-DTL-12883.
2. MATERIALS:
   A. HOUSING – POLYETHERIMIDE, COLOR: BLUE-GREEN.
   B. GROMMET – SILICONE ELASTOMER, 50±10 DUROMETER, COLOR: RED.
3. SOCKET CONTACTS CONFORM TO PERFORMANCE REQUIREMENTS OF SAE-AS39029, GOLD OVER NICKEL PLATE – SEE TABLE.
4. COMPLETE MOUNTING HARDWARE SUPPLIED AS SHOWN.
5. OPERATING TEMPERATURE: +125°C/-65°C CONTINUOUS.
6. CONTACT INSTALLATION TOOLS:

	#12 CONTACT	#16 CONTACT
CRIMP TOOL:	M22520/1-01	M22520/1-01
POSITIONER:	M22520/1-02	M22520/1-02
INSERTION/REMOVAL:	M81969/14-04	M81969/14-03

PART NO.	CONTACTS SUPPLIED		MARKING
	SZ 12/12 M39029/92-535	SZ 16/16 M39029/92-533	
RSE116626	–	–	RSE116627
RSE116627	6	5	

DIMENSIONS	TOLERANCES	PROJECTION
ANSI Y14.5M UNITS: INCHES ACAD FILE	.XX ±.01 .XXX ±.005 ANGLES ±2°	

Amphenol Pcd

SPECIFICATION DRAWING

ENGR A. PATRIE 11/23/98

CHKD 10/4/11

APPD 10/4/11

ORIGINAL

THIS DOCUMENT CONTAINS PROPRIETARY INFORMATION WHICH IS THE CONFIDENTIAL PROPERTY OF AMPHENOL PCD, BEVERLY, MA, USA

TITLE

RELAY SOCKET
3 POLE, 25 AMP
(6) SZ 12, (5) SZ 16

SIZE	DWG NO.	REV
B	RSE116626	L

CODE: 58982 | SCALE: 1X | SHEET 1 OF 1

RSE116626

RSE116626