Chipsmall Limited consists of a professional team with an average of over 10 year of expertise in the distribution of electronic components. Based in Hongkong, we have already established firm and mutual-benefit business relationships with customers from,Europe,America and south Asia,supplying obsolete and hard-to-find components to meet their specific needs.

With the principle of “Quality Parts,Customers Priority,Honest Operation,and Considerate Service”,our business mainly focus on the distribution of electronic components. Line cards we deal with include Microchip,ALPS,ROHM,Xilinx,Pulse,ON,Everlight and Freescale. Main products comprise IC,Modules,Potentiometer,IC Socket,Relay,Connector.Our parts cover such applications as commercial,industrial, and automotives areas.

We are looking forward to setting up business relationship with you and hope to provide you with the best service and solution. Let us make a better world for our industry!

# Contact us

Tel: +86-755-8981 8866 Fax: +86-755-8427 6832
Email & Skype: info@chipsmall.com Web: www.chipsmall.com
Address: A1208, Overseas Decoration Building, #122 Zhenhua RD., Futian, Shenzhen, China

| REVISIONS | | | | | |
|---|---|---|---|---|---|
| REV | ECO | DESCRIPTION | DATE | BY | APPR |
| A1 | -- | RELEASED DRAWING | Dec-26-2016 | Ben | Tommy |
| A2 | -- | UPDATE NOTES | Jul-06-2017 | Nick | Tommy |
| A3 | -- | UPDATE DRAWING | Mar-21-2018 | White | Tommy |

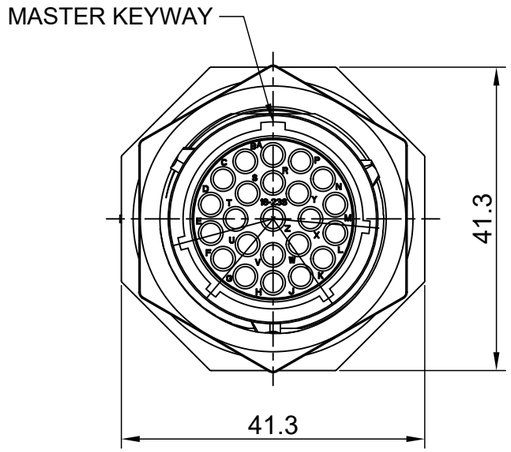


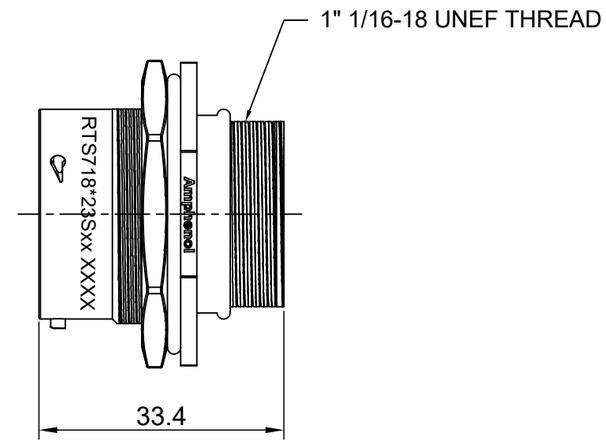


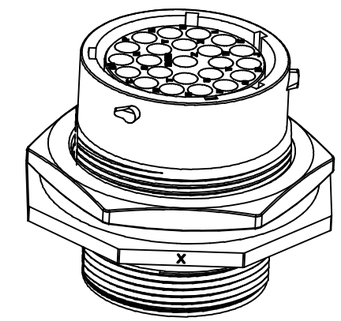

NOTES : (UNLESS OTHERWISE SPECIFIED)

1. MATERIAL :
   - SHELL : THERMOPLASTIC , UL94 V-0.
   - INSERT : THERMOPLASTIC , UL94 V-0.
   - O-RING : NBR/SILICONE RUBBER.
   - SEAL GASKET : NBR/SILICONE RUBBER.
   - JAM NUT : ALUMINIUM ALLOY , BLACK ANODIZING.
2. SPECIFICATIONS :
   - 2.1 RATED CURRENT : 13A MAX.
   - 2.2 RATED VOLTAGE : 500V(AC/DC).
   - 2.3 OPERATING TEMPERATURE : SEE TABLE.
   - 2.4 DIELECTRIC WITHSTANDING VOLTAGE : LESS THAN 2 MILLIAMPS CURRENT LEAKAGE@2000 VOLTS AC.
   - 2.5 INSULATION RESISTANCE : 5000 MEGOHMS MIN.
   - 2.6 IP--CLASS : IP67 AND IP69K IN THE MATED CONDITION, PANEL EXTERNAL.
   - 2.7 MATING CYCLES DURABILITY : 500 CYCLES MIN.
   - 2.8 RoHS COMPLIANT.
3. SUITABLE CONTACTS : 16# CONTACT.
4. ALL DIMENSIONS ARE FOR REFERENCE USE ONLY.

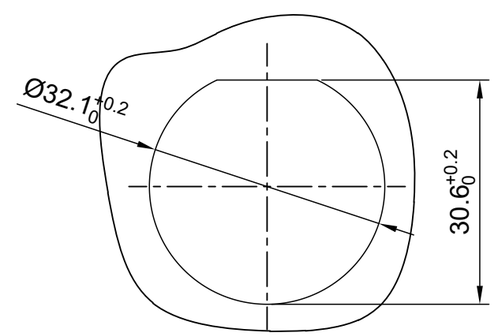


PANEL CUT OUT REFERENCE

| KEY | PART NUMBER | |
|---|---|---|
| | -40°C ~ 105°C | -40°C ~ 125°C |
| N | RTS718N23S | RTS718N23S03 |

| QUANTITY | PART NUMBER | DESCRIPTION | ITEM |
|---|---|---|---|

MATERIALS LIST

UNLESS OTHERWISE SPECIFIED
1) All dimensions are in metric(mm).
2) Tolerances are as follows:
1 PL DEC ±0.30 | Fractions ±1/64
2 PL DEC ±0.15 | Angles ±1°
3 PL DEC ±0.08
3) Note reference = X

MATERIAL SPECIFICATIONS:

PROCESS SPECIFICATIONS:

NEXT ASS'Y:

| SIGNATURES | | DATE |
|---|---|---|
| DRAWN: | White | Mar-21-2018 |
| CHECKED: | Tod | Mar-21-2018 |
| ENGINEER: | | |
| APPROVAL: | Tommy | Mar-21-2018 |
| CUSTOMER: | | |

THIS DRAWING IS SUPPLIED FOR INFORMATION ONLY. DESIGN FEATURES, SPECIFICATIONS AND PERFORMANCE DATA SHOWN HEREON ARE THE PROPERTY OF THE AMPHENOL CORPORATION. NO RIGHTS OF REPRODUCTION ARE IMPLIED. ALL DIMENSIONS ARE SUBJECT TO NORMAL MANUFACTURING VARIATIONS.

Amphenol
Sine Systems - www.amphenol-sine.com
44724 Morley Drive
Clinton Township, MI 48036

ECO-MATE,RECEPTACLE, JAM NUT, SIZE 18,23POS,SOCKET.

| SIZE | TYPE | DWG NO: | REVISION |
|---|---|---|---|
| B | C- | RTS718*23Sxx | A3 |

SCALE: NONE SHEET 1 OF 1

TITLE: ECO-MATE,RECEPTACLE,JAM NUT,SIZE 18,23POS,SOCKET.
DWG NO: RTS718*23Sxx
REV: A3
SH: 1
OF: 1