Chipsmall Limited consists of a professional team with an average of over 10 year of expertise in the distribution of electronic components. Based in Hongkong, we have already established firm and mutual-benefit business relationships with customers from,Europe,America and south Asia,supplying obsolete and hard-to-find components to meet their specific needs.

With the principle of “Quality Parts,Customers Priority,Honest Operation,and Considerate Service”,our business mainly focus on the distribution of electronic components. Line cards we deal with include Microchip,ALPS,ROHM,Xilinx,Pulse,ON,Everlight and Freescale. Main products comprise IC,Modules,Potentiometer,IC Socket,Relay,Connector.Our parts cover such applications as commercial,industrial, and automotives areas.

We are looking forward to setting up business relationship with you and hope to provide you with the best service and solution. Let us make a better world for our industry!

Contact us

Tel: +86-755-8981 8866 Fax: +86-755-8427 6832
Email & Skype: info@chipsmall.com Web: www.chipsmall.com
Address: A1208, Overseas Decoration Building, #122 Zhenhua RD., Futian, Shenzhen, China

Mallory Sonalert Products,Inc.

Part #: **SBS12M0FL**

Sales Outline Drawing

Revision: **G**

Specifications:	**cUL Recognized as capable of meeting Medical Spec IEC60601-1-8**
Sound Level Category:	Extra Loud
Mode of Operation:	Continuous
Loudness @ 10cm:	95 to 105 dB(A) Typ.
Frequency:	150 to 4000 Hz
Voltage Rating:	9 to 12 VDC
Average Current Draw:	<300mA Typ.
Ipk Current*:	400mA
Housing Material:	ABS 777D Plastic Resin, Black
Storage Temperature:	-40° to +85° C
Operating Temperature:	-30° to +65° C
Weight Typical:	1.1 oz (32g)
Options:	Please contact factory.

Dimensions: Inches [mm]

cUL Recognized

PATENT NUMBER: 7880593

ROHS Compliant

Before Code Date: 1546 Not cUL Recognized

After Code Date: 1547 cUL Recognized

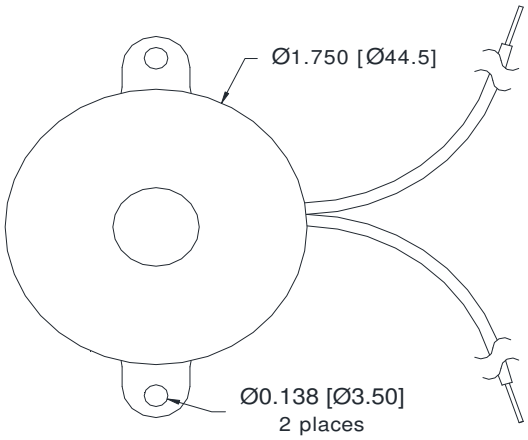

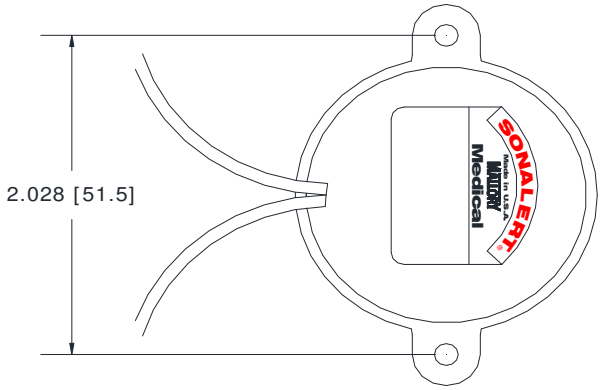

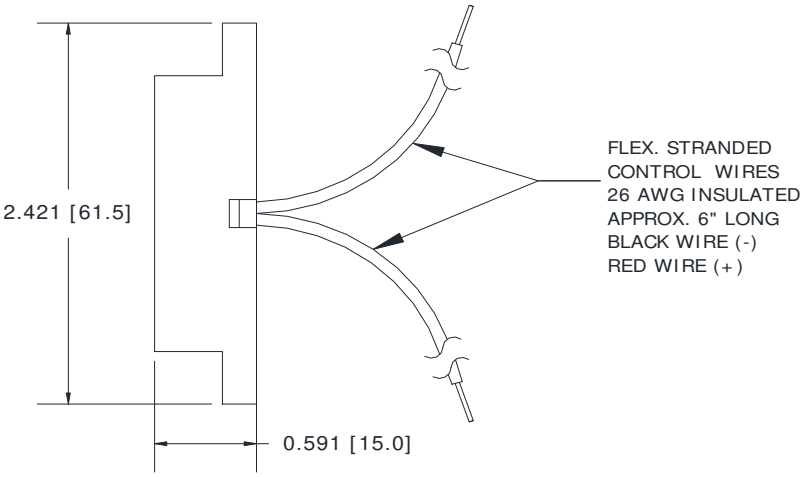

*Ipk = Instantaneous Peak

4411 South High School Road, Indianapolis, Indiana 46241 U.S.A · Phone: (317) 612-1000 Fax: (317) 612-1010 www.mallory-sonalert.com