Chipsmall Limited consists of a professional team with an average of over 10 year of expertise in the distribution of electronic components. Based in Hongkong, we have already established firm and mutual-benefit business relationships with customers from,Europe,America and south Asia,supplying obsolete and hard-to-find components to meet their specific needs.

With the principle of “Quality Parts,Customers Priority,Honest Operation,and Considerate Service”,our business mainly focus on the distribution of electronic components. Line cards we deal with include Microchip,ALPS,ROHM,Xilinx,Pulse,ON,Everlight and Freescale. Main products comprise IC,Modules,Potentiometer,IC Socket,Relay,Connector.Our parts cover such applications as commercial,industrial, and automotives areas.

We are looking forward to setting up business relationship with you and hope to provide you with the best service and solution. Let us make a better world for our industry!

Contact us

Tel: +86-755-8981 8866 Fax: +86-755-8427 6832
Email & Skype: info@chipsmall.com Web: www.chipsmall.com
Address: A1208, Overseas Decoration Building, #122 Zhenhua RD., Futian, Shenzhen, China

版数 REV.	年月日 DATE	DCN NO.	変更内容 DESCRIPTION	製図 DR.	担当 CHK.	査閲 APPD.	承認 APPD.
2	6.Mar.2006	059532	CORRECTED A ERROR IN WRITTING		A.MATSUNAGA	—	A.Natori

図面番号(DRAWING NO.) SJ100002

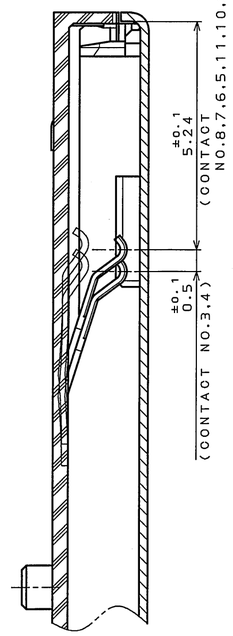

SECT. A-A
(SCALE 10:1)

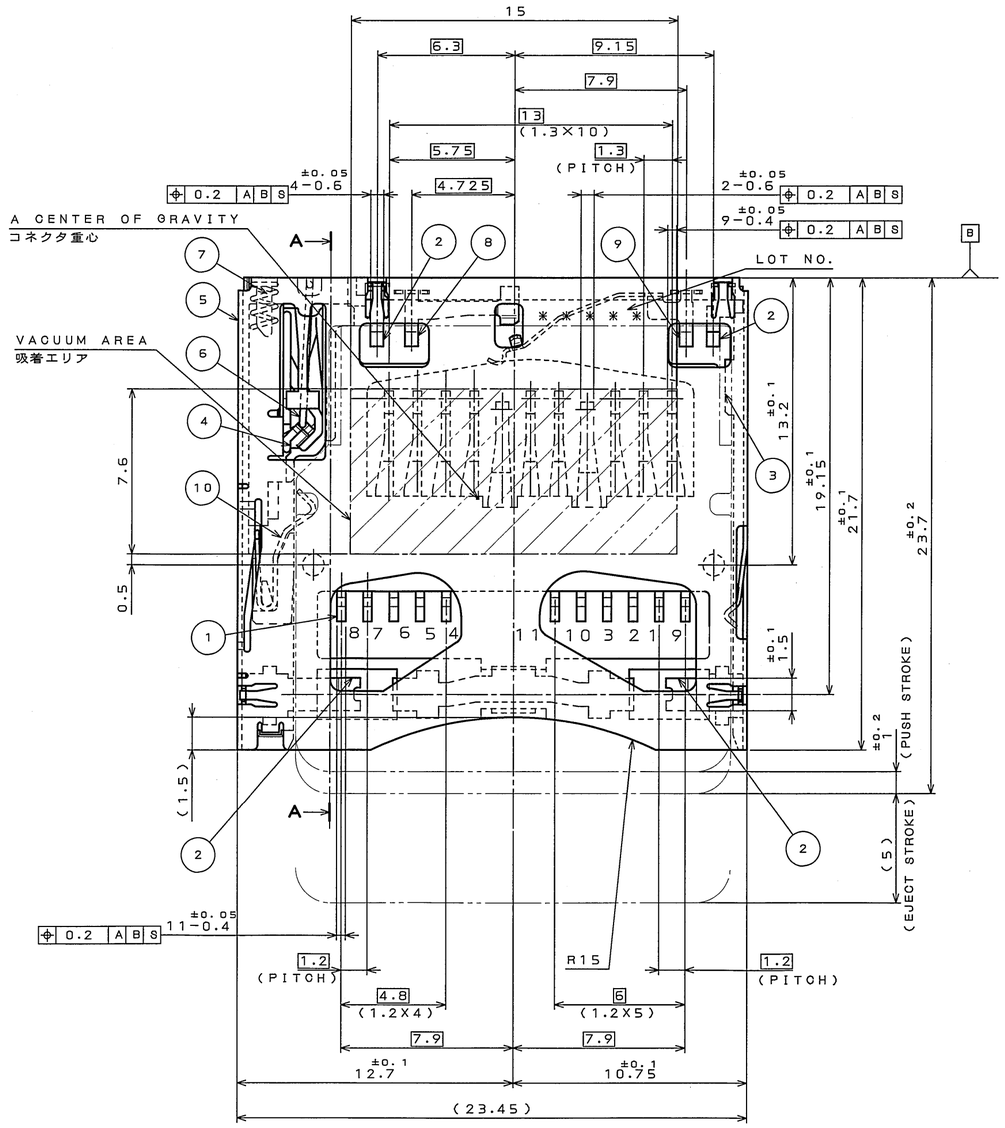

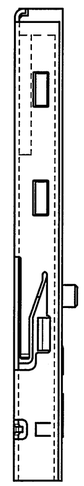

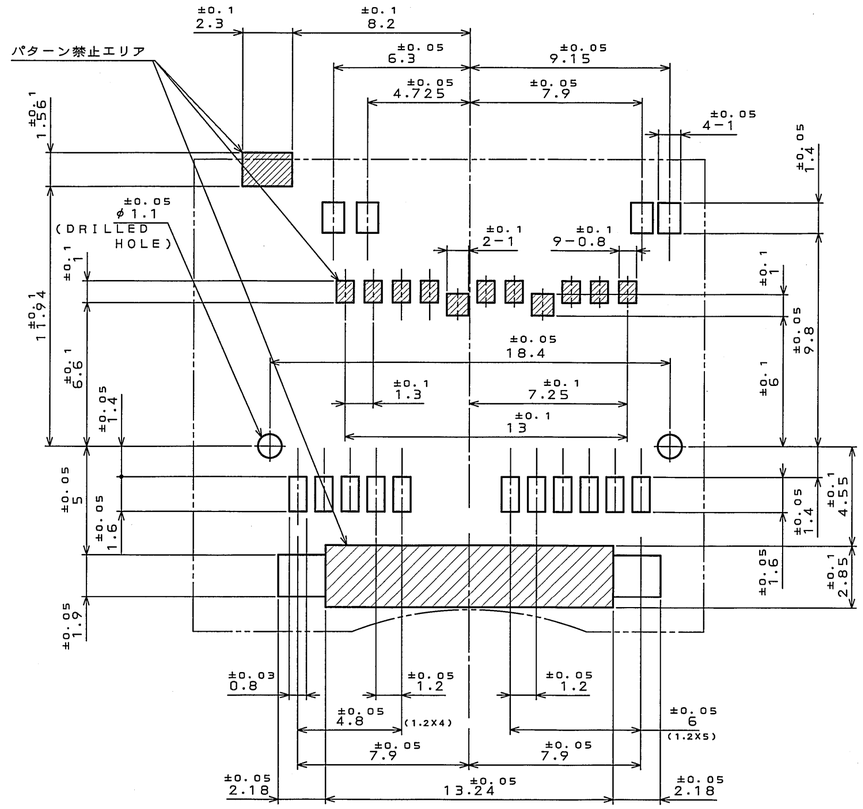

APPLICABLE P.C.B. DIMENSION(REF.)
適合基板寸法(参考)

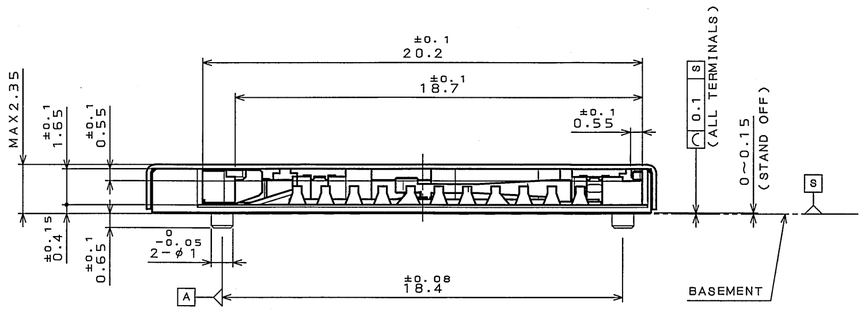

符号 NO.	名称 DESCRIPTION	個数 QTY.	材料 MATERIAL	仕上 FINISH	備考 REMARKS
10	CARD LOCK	1	STAINLESS		
9	DETECTION SWITCH CONTACT 1	1	COPPER ALLOY	CONTACTING AREA:GOLD OVER NICKEL TERMINAL AREA:GOLD FLASH OVER NICKEL	
8	DETECTION SWITCH CONTACT 2	1	COPPER ALLOY	CONTACTING AREA:GOLD OVER NICKEL TERMINAL AREA:GOLD FLASH OVER NICKEL	
7	SPRING	1	PIANO WIRE	ZINC PLATING	
6	CAM FOLLOWER	1	PIANO WIRE	NICKEL	
5	COVER	1	STAINLESS		
4	EJECT LEVER	1	GLASS FILLD Ny		UL94 V-0
3	HOUSING	1	GLASS FILLED LCP		UL94 V-0
2	HOLD DOWN	4	COPPER ALLOY	GOLD FLASH OVER NICKEL △2	
1	CONTACT	9	COPPER ALLOY	CONTACTING AREA:GOLD OVER NICKEL TERMINAL AREA:GOLD FLASH OVER NICKEL	

TABLE1.CIRCUIT(REF.)

	WITHOUT CARD	CARD INSERTED
DETECTION SWITCH	9 — 8, GND	9 — 8, GND

NOTE1.The thickness of reinforcement board is 0.6MIN, when the product will mount on FPC.
NOTE2.CIRCUIT(TABLE.1)(REFERENCE)

注1.FPC搭載時の補強板厚は0.6以上とする.
注2.回路図(表1)(参考)

仕様書(SPECIFICATION)	第1版(ORIGINAL DATE) 3.Sep.2003	尺度(SCALE) 5:1	シリーズ(SERIES) SC1
一般公差(GENERAL TOLERANCE) 寸法(DIMENSION) / 角度(ANGLES)	製図 DR.	名称(TITLE) SC1SC11V1S2	日本航空電子工業株式会社 JAPAN AVIATION ELECTRONICS INDUSTRY, LTD.
. ±0.8 / .X ±0.4 / .XX ±0.1 / .XXX± / X° ± / XX' ±	担当 CHK. M.KODERA		
	査閲 APPD. A.NATORI		
	承認 APPD. K.SUZUKI	質量(MASS)	図面番号(DRAWING NO.) SJ100002
			版数 (REV.) 2

SIZE A2

JAE CONNECTOR DIV. PROPRIETARY.
COPYRIGHT (C) 2003, JAPAN AVIATION ELECTRONICS INDUSTRY, LTD.
JAE CONNECTOR.COM Reference Only

DOF-0-213F(05.08)