Chipsmall Limited consists of a professional team with an average of over 10 year of expertise in the distribution of electronic components. Based in Hongkong, we have already established firm and mutual-benefit business relationships with customers from,Europe,America and south Asia,supplying obsolete and hard-to-find components to meet their specific needs.

With the principle of “Quality Parts,Customers Priority,Honest Operation,and Considerate Service”,our business mainly focus on the distribution of electronic components. Line cards we deal with include Microchip,ALPS,ROHM,Xilinx,Pulse,ON,Everlight and Freescale. Main products comprise IC,Modules,Potentiometer,IC Socket,Relay,Connector.Our parts cover such applications as commercial,industrial, and automotives areas.

We are looking forward to setting up business relationship with you and hope to provide you with the best service and solution. Let us make a better world for our industry!

Contact us

Tel: +86-755-8981 8866 Fax: +86-755-8427 6832
Email & Skype: info@chipsmall.com Web: www.chipsmall.com
Address: A1208, Overseas Decoration Building, #122 Zhenhua RD., Futian, Shenzhen, China

NOTES:
1. MAX. MOUNTING TORQUE = 6 lb-in.
2. HARDWARE IS INCLUDED.

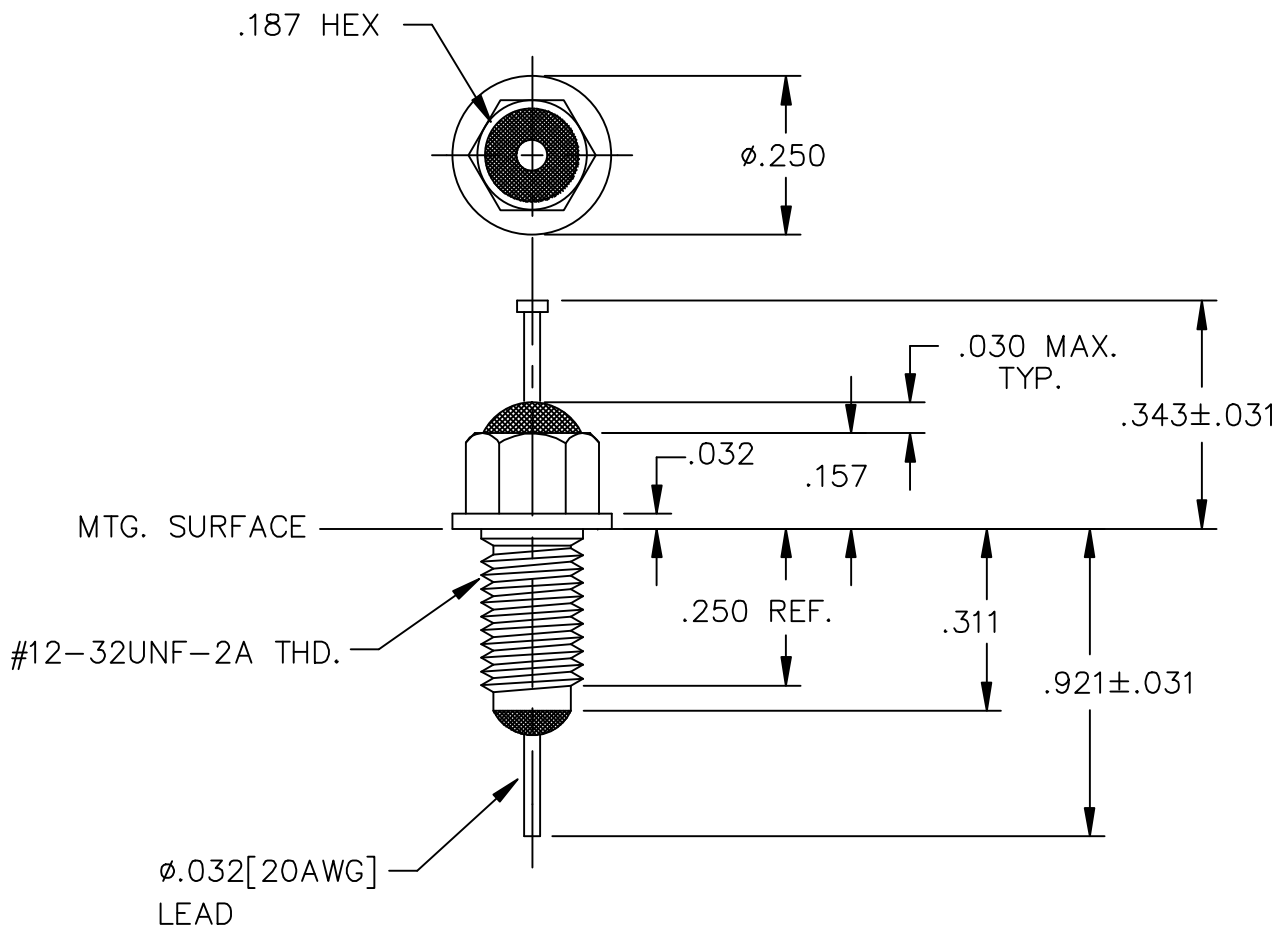

LEAD FINISH:	SOLDER
BUSHING FINISH:	SILVER
CAPACITANCE	0.1uF MIN.
TEMP. RANGE	-55°C TO 125°C
CURRENT	10 AMP MAX.
WORKING VOLTAGE	85°C 100 VDC MAX. 125°C 100 VDC MAX.
D.C. RESISTANCE	.01ohms MAX.

MIN. I.L. PER MIL-STD-220 AT 25°C NO LOAD

FREQ. MHz	I.L. (db)
1	10
3	40
10	65
100	70
1 GHz	70
10 GHz	70

SCHEMATIC

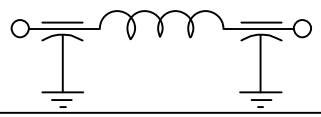

MARKING:
PART: S3313000
BAG:
SCI-3313-000
DATE CODE
LOT NO.
03 QTY. (200 PCS. MAX.)

REV. NO.	CHANGE NOTICE
3	CN #2640
2	CN 201767
1	CN 190709
0	CN. 178797

TOLERANCES UNLESS OTHERWISE SPECIFIED
Fractions ± 1/64
Dec. .xx±
Dec. .xxx±.010
Angles ±0° 30'

CODE IDENT. NO. OLSP2

api technologies corp.
FAIRVIEW PENNSYLVANIA

Dwn. KAUFFMAN
Ckd. 3-19-14
Scale NONE

Description Pi
RESIN SEAL FILTER

SCI-3313-000