Chipsmall Limited consists of a professional team with an average of over 10 year of expertise in the distribution of electronic components. Based in Hongkong, we have already established firm and mutual-benefit business relationships with customers from,Europe,America and south Asia,supplying obsolete and hard-to-find components to meet their specific needs.

With the principle of “Quality Parts,Customers Priority,Honest Operation,and Considerate Service”,our business mainly focus on the distribution of electronic components. Line cards we deal with include Microchip,ALPS,ROHM,Xilinx,Pulse,ON,Everlight and Freescale. Main products comprise IC,Modules,Potentiometer,IC Socket,Relay,Connector.Our parts cover such applications as commercial,industrial, and automotives areas.

We are looking forward to setting up business relationship with you and hope to provide you with the best service and solution. Let us make a better world for our industry!

Contact us

Tel: +86-755-8981 8866 Fax: +86-755-8427 6832
Email & Skype: info@chipsmall.com Web: www.chipsmall.com
Address: A1208, Overseas Decoration Building, #122 Zhenhua RD., Futian, Shenzhen, China

版数 REV.	年月日 DATE	DCN NO.	変更内容 DESCRIPTION	製図 DR.	担当 CHK.	査閲 APPD.	承認 APPD.
2	21.May.2007	063032	REVISED HOUSING MATERIAL.	H.KAMATA	A.NATORI	———	A.Natori

図面番号(DRAWING NO.) SJ104167

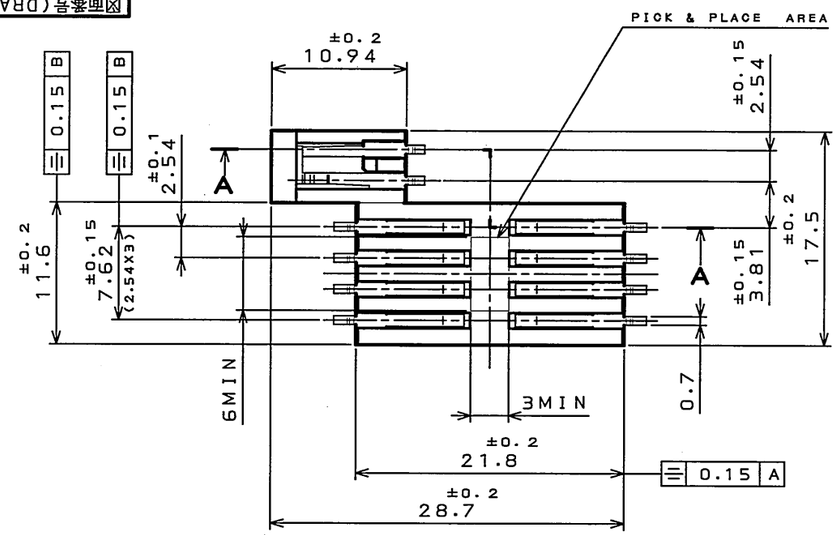

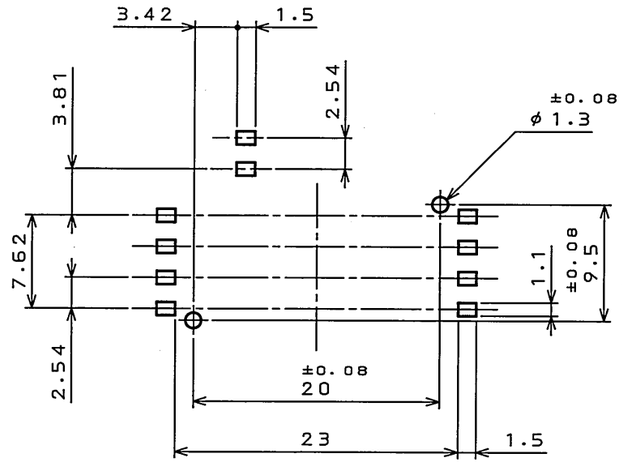

APPLICABLE P.C.B. DIMENSION(REF.)

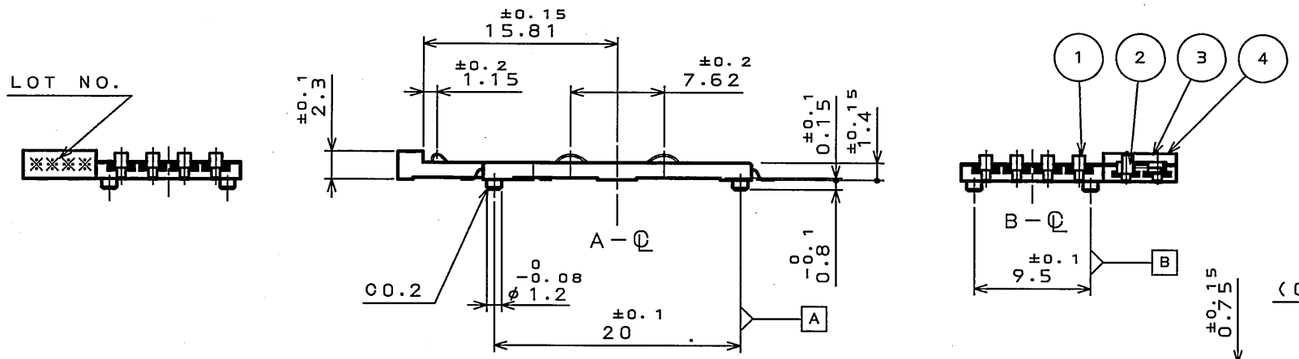

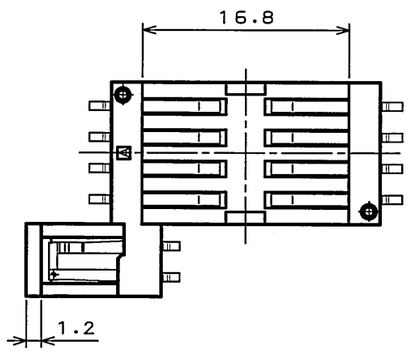

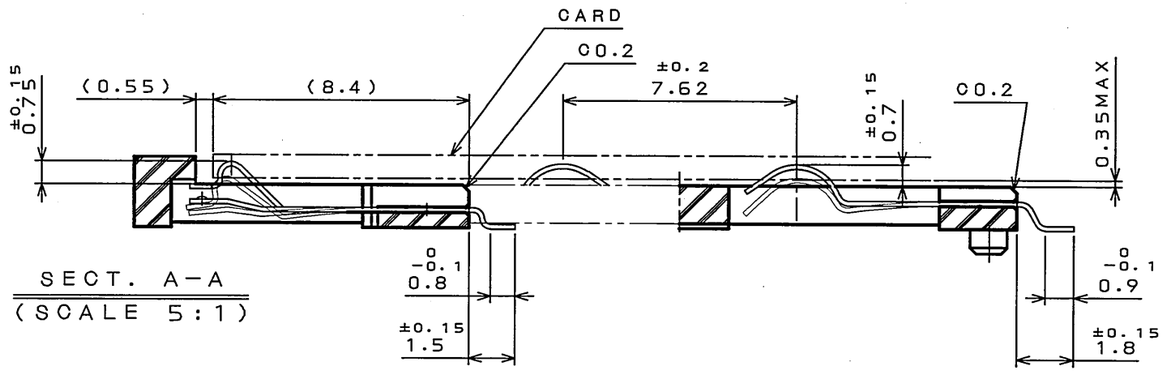

SECT. A-A
(SCALE 5:1)

符号 NO.	名称 DESCRIPTION	個数 QTY.	材料 MATERIAL	仕上 FINISH	備考 REMARKS
4	HOUSING	1	GLASS FILLED LCP △2	———	UL94 V-0 COLOR:BLACK
3	SWITCH CONTACT B	1	COPPER ALLOY	TABLE1	JIS H 3110
2	SWITCH CONTACT A	1	COPPER ALLOY	TABLE1	JIS H 3110
1	CONTACT	8	COPPER ALLOY	TABLE1	JIS H 3110

TABLE1. CONTACT FINISH

CONTACT AREA	TERMINAL AREA
GOLD (0.03μm MIN) OVER PALLADIUM-NICKEL(0.4μmMIN) OVER NICKEL	Au FLUSH OVER NIKEL

仕様書(SPECIFICATION) JACS-1512-*	第1版(ORIGINAL DATE) 11.Apr.2005	尺度(SCALE) 2:1	シリーズ(SERIES) SF1
一般公差(GENERAL TOLERANCE) 寸法(DIMENSION): .± 0.8, .X ±0.4, .XX ±0.1, .XXX± 角度(ANGLES): X° ±, X°X' ±	製図 DR.	名称(TITLE) SF1W010S9DE	日本航空電子工業株式会社 JAPAN AVIATION ELECTRONICS INDUSTRY, LTD.
	担当 CHK. M.SHIMADA		
	査閲 APPD. ———		
	承認 APPD. A.NATORI	質量(MASS) ———	図面番号(DRAWING NO.) SJ104167
			SIZE A3 / 版数(REV.) 2

JAE-CONNECTOR.COM
Reference Only

JAE CONNECTOR DIV. PROPRIETARY.
COPYRIGHT (C) 2005, JAPAN AVIATION ELECTRONICS INDUSTRY, LTD.

DOF-0-212F(05.08)

0 10 20 30 40 50 60 70 80 90 100