Chipsmall Limited consists of a professional team with an average of over 10 year of expertise in the distribution of electronic components. Based in Hongkong, we have already established firm and mutual-benefit business relationships with customers from,Europe,America and south Asia,supplying obsolete and hard-to-find components to meet their specific needs.

With the principle of “Quality Parts,Customers Priority,Honest Operation,and Considerate Service”,our business mainly focus on the distribution of electronic components. Line cards we deal with include Microchip,ALPS,ROHM,Xilinx,Pulse,ON,Everlight and Freescale. Main products comprise IC,Modules,Potentiometer,IC Socket,Relay,Connector.Our parts cover such applications as commercial,industrial, and automotives areas.

We are looking forward to setting up business relationship with you and hope to provide you with the best service and solution. Let us make a better world for our industry!

Contact us

Tel: +86-755-8981 8866 Fax: +86-755-8427 6832
Email & Skype: info@chipsmall.com Web: www.chipsmall.com
Address: A1208, Overseas Decoration Building, #122 Zhenhua RD., Futian, Shenzhen, China

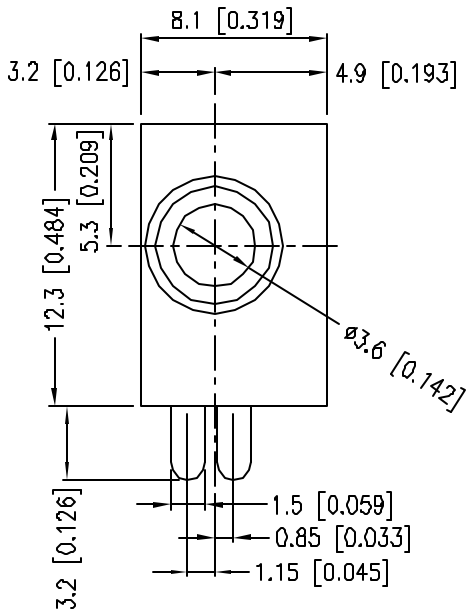

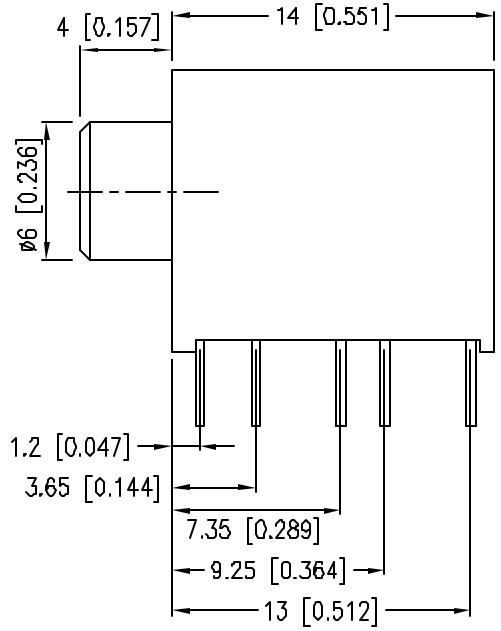

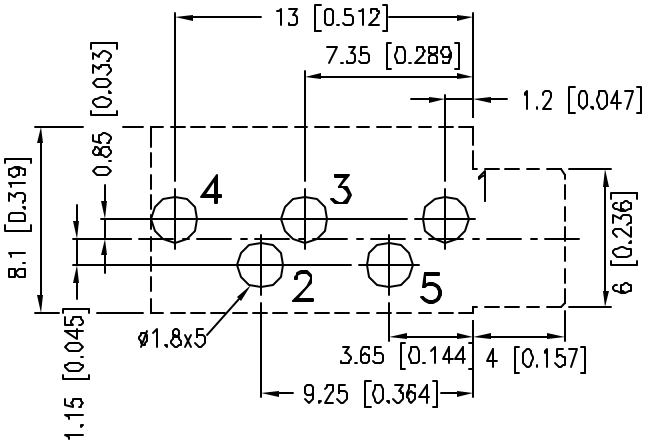

HOLE LAYOUT
(TOP VIEW)

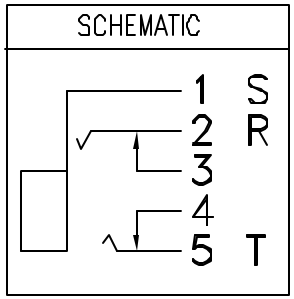

SPECIFICATIONS:
RATING: 12V DC @ 1A
CONTACT RESISTANCE:
30 mOHMS MAX
INSULATION RESISTANCE:
100 MOHMS MIN @ 500V DC
WITHSTAND VOLTAGE:
500V AC FOR 1 MINUTE
LIFE: 5,000 CYCLES

CUI INC
9615 SW Allen, Suite 103
Beaverton, OR 97005
Phone: (503) 643-4899
800-275-4899
Fax: (503) 372-1266
Website: www.cui.com

TITLE: 3.5mm AUDIO JACK-STEREO

PART NO.	UNITS:
SJ-3535NG	MM [INCHES]

DRAWN BY:	APPROVED BY:	SCALE:
		3X

PC FILE NAME: SJ3535NG.DWG

COPYRIGHT 1997 BY CUI INC.