Chipsmall Limited consists of a professional team with an average of over 10 year of expertise in the distribution of electronic components. Based in Hongkong, we have already established firm and mutual-benefit business relationships with customers from,Europe,America and south Asia,supplying obsolete and hard-to-find components to meet their specific needs.

With the principle of “Quality Parts,Customers Priority,Honest Operation,and Considerate Service”,our business mainly focus on the distribution of electronic components. Line cards we deal with include Microchip,ALPS,ROHM,Xilinx,Pulse,ON,Everlight and Freescale. Main products comprise IC,Modules,Potentiometer,IC Socket,Relay,Connector.Our parts cover such applications as commercial,industrial, and automotives areas.

We are looking forward to setting up business relationship with you and hope to provide you with the best service and solution. Let us make a better world for our industry!

Contact us

Tel: +86-755-8981 8866 Fax: +86-755-8427 6832
Email & Skype: info@chipsmall.com Web: www.chipsmall.com
Address: A1208, Overseas Decoration Building, #122 Zhenhua RD., Futian, Shenzhen, China

版数 VER.	年月日 DATE	CN NO.	変更内容 DESCRIPTION	製図 DR.	担当 CHK.	査閲 APPD.	承認 APPD.
2	26/JUN/2014	008839	Specification is changed.		S.YAMAGUCHI	M.SASAKI	T.SHINDOU
3	30/MAR/2015	012835	Correct an error.		S.YAMAGUCHI	M.SASAKI	T.SHINDOU
4	29/JUN/2015	013559	Add KEY version(KEY-M).		S.YAMAGUCHI	M.SASAKI	T.MASUMOTO

図面番号(DRAWING NO.) SJ114364

WISDOM承認 2015/07/02

DESIGNATION

SM3ZS067B120※※2

- SERIES シリーズ
- Z:LIF TYPE Z:低挿入タイプ
- S:STANDARD R:REVERSE
- NO. OF CONTACTS 芯数
- MOUNTING TYPE 実装タイプ B:MID MOUNT TYPE
- PRODUCT HEIGHT 製品高さ 120:1.2mm
- CONTACT FINISH 接点仕上げ A:Au(0.13μm MIN) B:Au(0.25μm MIN)
- KEY POSITION 4 TYPE:B,E,M
- MODIFICATION CODE モディファイコード 1:THROUGH HOLE HOLD DOWN 2:SMT HOLD DOWN

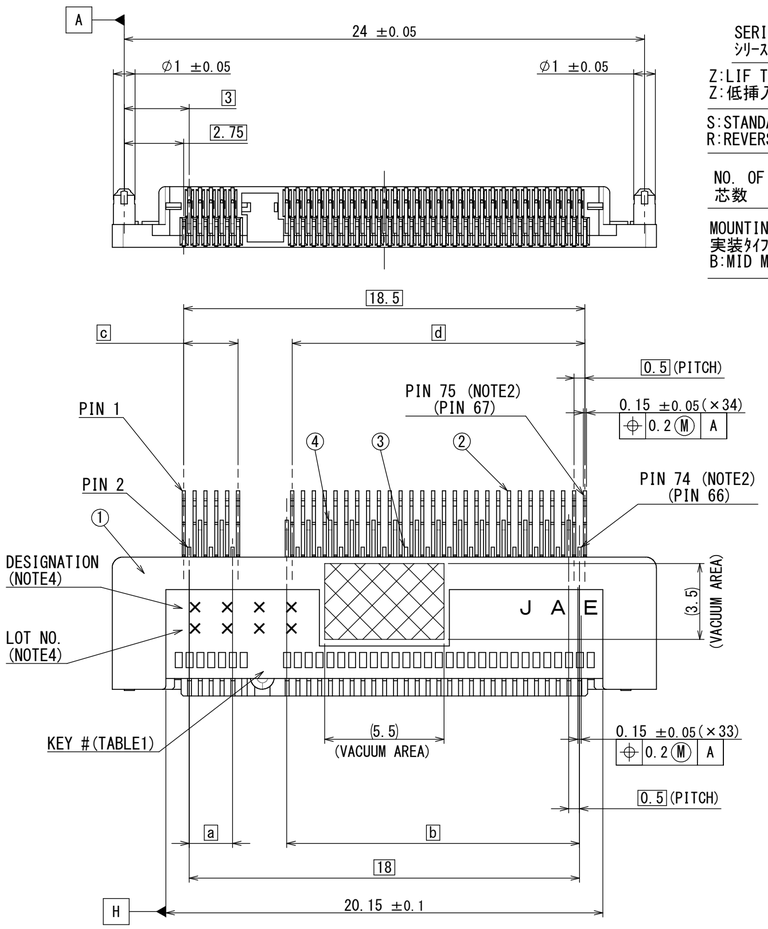

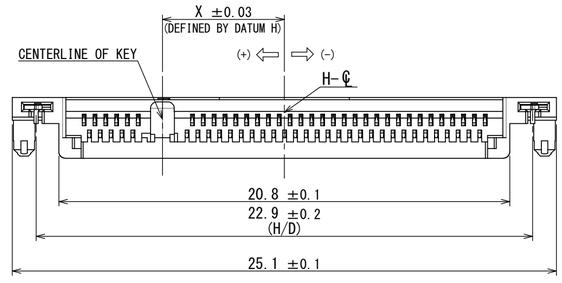

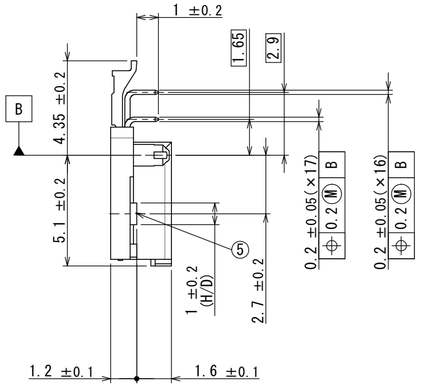

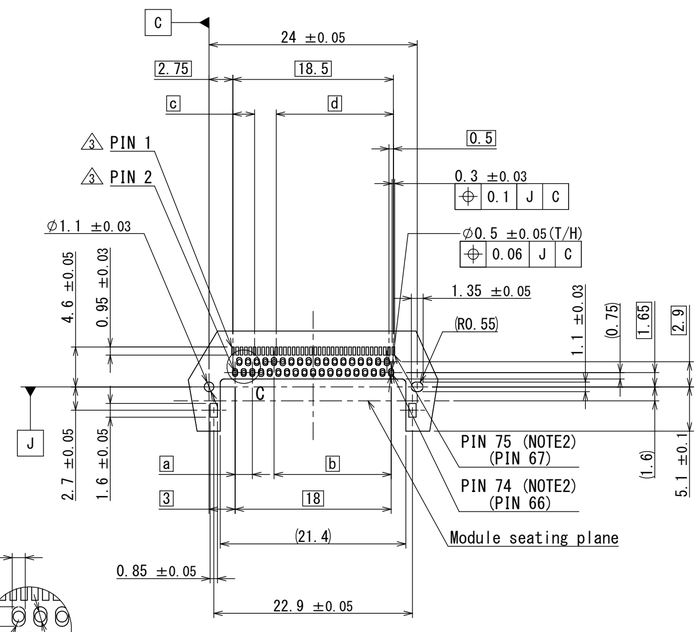

APPLICABLE P.C.B LAYOUT
SCALE(2:1)

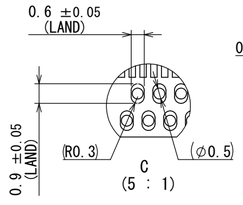

C
(5 : 1)

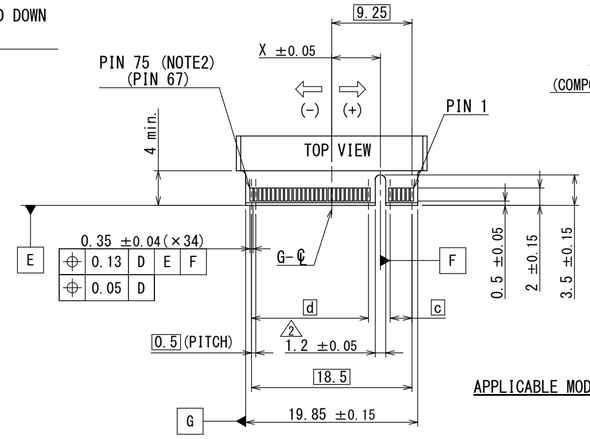

APPLICABLE MODULE DIMENSION (REF.) (NOTE2)
SCALE(2 : 1)

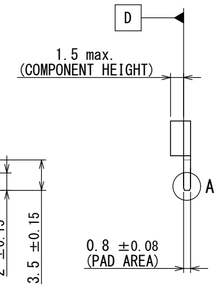

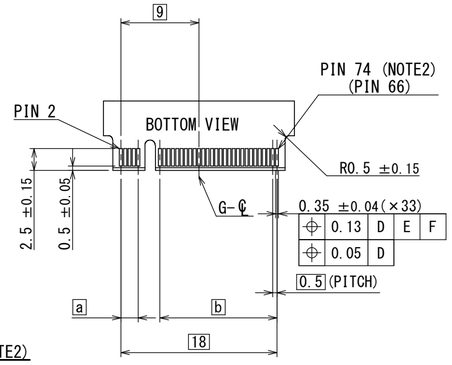

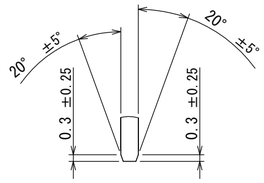

A
(5 : 1)

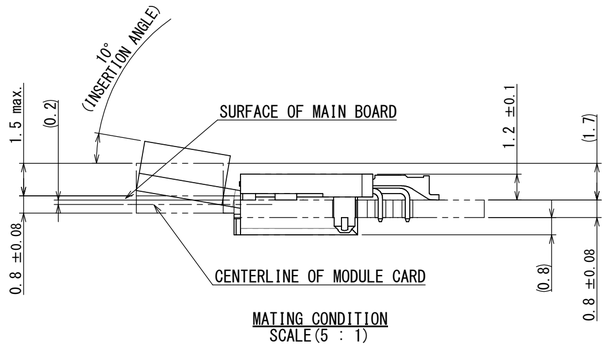

MATING CONDITION
SCALE(5 : 1)

NOTE1. THE COPLANARITY OF CONTACT AND HOLD DOWN SHALL BE 0.1mm MAXIMUM ON THE SURFACE TABLE.
NOTE2. THIS NUMBER IS PIN-OUT NUMBER DEFINED BY NGFF SPECIFICATION.
NOTE3. THIS CONNECTOR IS HALOGEN FREE CORRESPONDENCE PRODUCT.
NOTE4. PRODUCTION LOT No.&MODIFY CODE AS INDICATED.

(Ex. LOT NO.) T 5 Y B
- LOT NUMBER OF CURRENT DAY (SEE TABLE 2)
- MONTH (1 TO 9 FOR JAN. TO SEPT, RESPECTIVELY, OCT.:O, NOV.:X, DEC.:Y)
- YEAR (LAST DIGIT ONLY)
- MANUFACTURE CODE

(DESIGNATION) S M 3 B
- KEY POSITION 4 TYPE:B,E,M
- SERIES PREFIX

TABLE 1 4

KEY#	X	a	b	c	d
B	+5.625	2	13.5	2.5	13.5
E	+2.625	5	10.5	5.5	10.5
M	-6.125	14	1.5	14	2

TABLE 2. LOT NUMBER CODE OF CURRENT DAY (END OF LOT No.)

DAY	1	2	3	4	5	6	7	8	9	10
CODE	1	2	3	4	5	6	7	8	9	0

DAY	11	12	13	14	15	16	17	18	19	20
CODE	A	B	C	D	E	F	G	H	J	K

DAY	21	22	23	24	25	26	27	28	29	30	31
CODE	L	M	N	P	Q	R	S	T	V	W	X

符号 NO.	名称 DESCRIPTION	個数 QTY.	材料 MATERIAL	仕上 FINISH	備考 REMARKS
5	HOLD DOWN	2	COPPER ALLOY	TIN PLATING OVER Ni	
4	LOWER CONTACT2	16	COPPER ALLOY	CONTACT AREA: REFER TO DESIGNATION SOLDERING AREA: Au FLASH OVER Ni	
3	LOWER CONTACT1	17	COPPER ALLOY	CONTACT AREA: REFER TO DESIGNATION SOLDERING AREA: Au FLASH OVER Ni	
2	UPPER CONTACT	34	COPPER ALLOY	CONTACT AREA: REFER TO DESIGNATION SOLDERING AREA: Au FLASH OVER Ni	
1	INSULATOR	1	THERMO PLASTIC		

仕様書(SPECIFICATION)

一般公差(GENERAL TOLERANCE)
寸法(DIMENSION): .±0.8 / .×±0.4 / .××±0.1 / .×××± 角度(ANGLES): ×°± / ×°×'±
単位(UNIT):mm

第1版(ORIGINAL DATE)	22/JUL/2013
製図 DR.	
担当 CHK.	S.YAMAGUCHI
査閲 APPD.	R.KATOU
承認 APPD.	T.SHINDOU

尺度(SCALE) 5:1
シリーズ(SERIES) SM3
名称(TITLE) SM3ZS067B120**2
質量(MASS)

日本航空電子工業株式会社
JAPAN AVIATION ELECTRONICS INDUSTRY, LTD.

図面番号(DRAWING NO.) SJ114364
SIZE A2
版数(VER.) 4

JAE-CONNECTOR.COM Reference Only

JAE Connector DIV. Proprietary.Copyright(C) 2013, Japan Aviation Electronics Industry, LTD.

DCF-C-213K(12.08)