Chipsmall Limited consists of a professional team with an average of over 10 year of expertise in the distribution of electronic components. Based in Hongkong, we have already established firm and mutual-benefit business relationships with customers from,Europe,America and south Asia,supplying obsolete and hard-to-find components to meet their specific needs.

With the principle of “Quality Parts,Customers Priority,Honest Operation,and Considerate Service”,our business mainly focus on the distribution of electronic components. Line cards we deal with include Microchip,ALPS,ROHM,Xilinx,Pulse,ON,Everlight and Freescale. Main products comprise IC,Modules,Potentiometer,IC Socket,Relay,Connector.Our parts cover such applications as commercial,industrial, and automotives areas.

We are looking forward to setting up business relationship with you and hope to provide you with the best service and solution. Let us make a better world for our industry!

Contact us

Tel: +86-755-8981 8866 Fax: +86-755-8427 6832
Email & Skype: info@chipsmall.com Web: www.chipsmall.com
Address: A1208, Overseas Decoration Building, #122 Zhenhua RD., Futian, Shenzhen, China

版数 REV.	年月日 DATE	DCN NO.	変更内容 DESCRIPTION	製図 DR.	担当 CHK.	査閲 APPD.	承認 APPD.
2	14.Jan.2011	071420	REDRAWN(JAPANESE→ BILINGUAL)		T.SHIINA	K.FURUKATSU	T.MIYASHITA

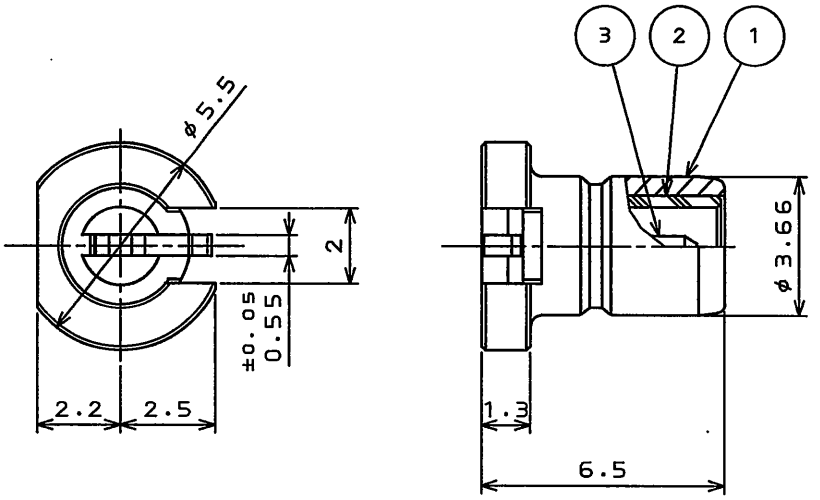

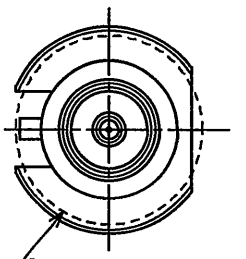

④Tape up the position
テープ貼付位置

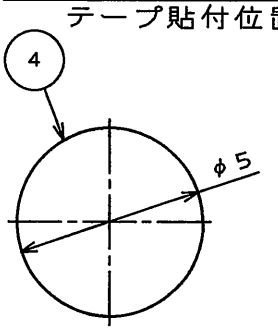

STICKING TAPE
吸着用テープ

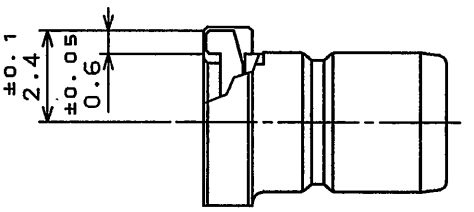

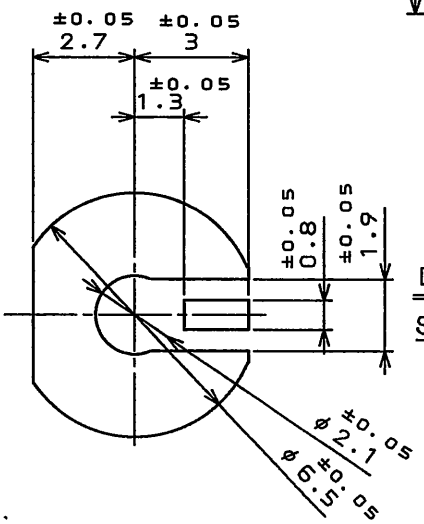

MOUNTING PATTERNS (REF.)
取付参考寸法

DESIGNATION 命名法

SMBR004D00

- CONNECTION No.00 : NO CONNECTION 結線タイプ : 結線ではない
- CHARACTERISTIC IMPEDANCE : D=50Ω 特性インピーダンス : D=50Ω
- DEVELOPMENT No. 開発番号
- CONNECTER TYPE:R = STRAIGHT RECEPTACLE コネクタ形状:=ストレートレセプタクル
- SERIES : SMB シリーズ名:SMB同軸コネクタ

符号 NO.	名称 DESCRIPTION	個数 QTY.	材料 MATERIAL	仕上 FINISH	備考 REMARKS
4	STICKING TAPE	1	———	———	———
3	PIN CONTACT	1	PHOSPHOR BRONZE	GOLD PLATING OVER NICKEL	———
2	INSULATOR	1	SPS	———	———
1	SHELL	1	BRASS	GOLD PLATING OVER NICKEL	———

仕様書(SPECIFICATION) JACS-2237

第1版(ORIGINAL DATE) 5.Feb.2007

名称(TITLE) SMBR004D00

製図 DR. ———
担当 CHK. M.MATSUMOTO
査閲 APPD. K.FURUKATSU
承認 APPD. Y.SUGII

一般公差(GENERAL TOLERANCE)

寸法(DIMENSION)	角度(ANGLES)
. ±0.8	X° ±—
.X ±0.4	X°X' ±—
.XX ±0.1	
.XXX ±—	

シリーズ(SERIES) SMB
尺度(SCALE) 5:1

日本航空電子工業株式会社
JAPAN AVIATION ELECTRONICS INDUSTRY, LTD.

図面番号(DRAWING NO.) SJ107482

SIZE A4
版数(REV.) 2

DOF-0-211F(05.08)

JAE CONNECTOR.COM
Reference Only

JAE CONNECTOR DIV. PROPRIETARY.
COPYRIGHT (C) 2007, JAPAN AVIATION ELECTRONICS INDUSTRY, LTD.