Chipsmall Limited consists of a professional team with an average of over 10 year of expertise in the distribution of electronic components. Based in Hongkong, we have already established firm and mutual-benefit business relationships with customers from,Europe,America and south Asia,supplying obsolete and hard-to-find components to meet their specific needs.

With the principle of “Quality Parts,Customers Priority,Honest Operation,and Considerate Service”,our business mainly focus on the distribution of electronic components. Line cards we deal with include Microchip,ALPS,ROHM,Xilinx,Pulse,ON,Everlight and Freescale. Main products comprise IC,Modules,Potentiometer,IC Socket,Relay,Connector.Our parts cover such applications as commercial,industrial, and automotives areas.

We are looking forward to setting up business relationship with you and hope to provide you with the best service and solution. Let us make a better world for our industry!

Contact us

Tel: +86-755-8981 8866 Fax: +86-755-8427 6832
Email & Skype: info@chipsmall.com Web: www.chipsmall.com
Address: A1208, Overseas Decoration Building, #122 Zhenhua RD., Futian, Shenzhen, China

THIRD ANGLE PROJ.

REVISIONS				
REV	DESCRIPTION	DATE	ECO	APPR
A	RELEASE TO MFG	11/22/05	45809	MAH
B	SYNCH THE DRAWING\RD-DM12121701J7	27-Dec-12	49364	SH

NOTES:

1. MATERIALS AND FINISHES:
   - BODY - BeCu, GOLD PLATING, .000030 [0.8] THICK OVER NICKEL
   - CONTACT - BeCu, GOLD PLATING, .000030 [0.8] THICK OVER NICKEL
   - INSULATOR - PTFE
2. ELECTRICAL:
   - A. IMPEDANCE: 50 OHM
   - B. FREQUENCY RANGE: DC - 26.5 GHz
   - C. VSWR(RETURN LOSS): 1.2 (20.8 dB), MAX. DC-10GHz
     1.4 (15.6 dB), MAX. 10-18GHz
     1.5 (14 dB), MAX. 18-26.5GHz
   - D. DIELECTRIC WITHSTANDING VOLTAGE: 500 VRMS, MIN.
3. PHYSICAL:
   - A. DURABILTIY: 100 CYCLES MIN.
   - B. ENGAGEMENT FORCE: 15 LB [67 N] MAX
   - C. DISINGAGEMENT FORCE: 2 LB [9 N] MIN
   - E. TEMERATURE RANGE: -65° C TO 165° C
4. PACKAGING:
   - A. QUANTITY: SINGLE PACK
   - B. MARKING:
     - RNT 9003/05
     - AMPHENOL
     - SMP-FSBA-145
     - DATE CODE
     - QTY

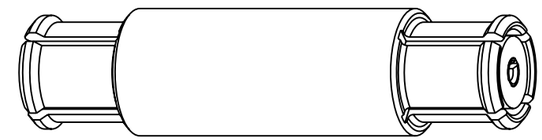

SCALE 6.000

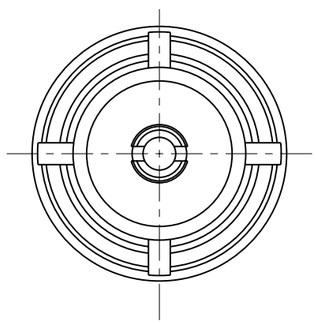

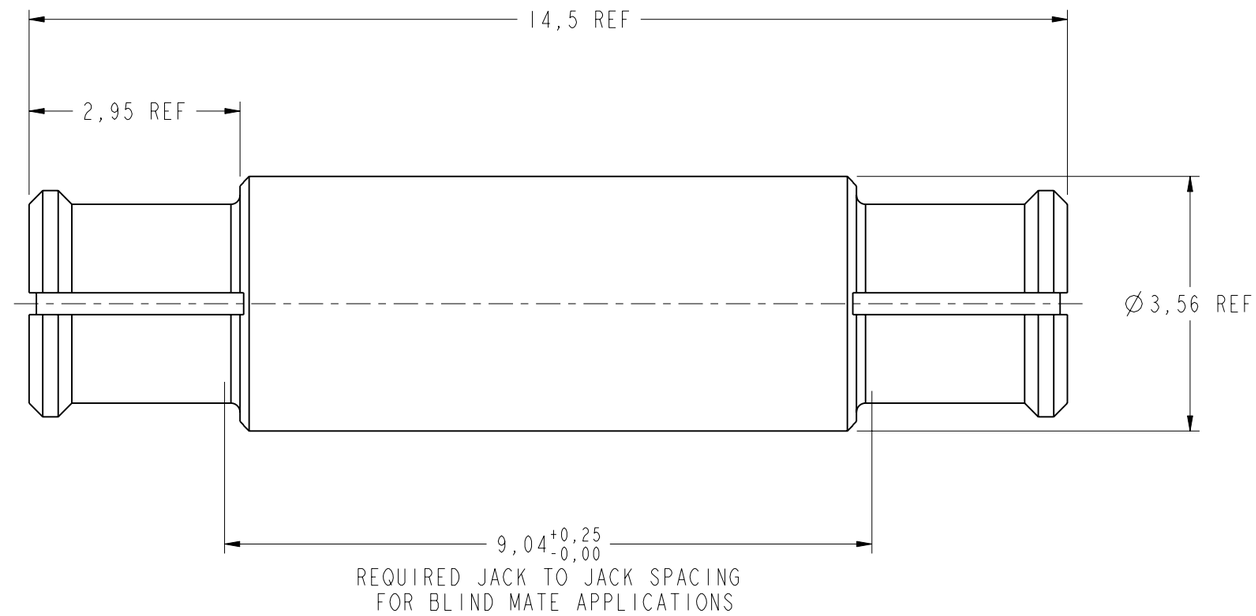

CUSTOMER OUTLINE DRAWING

ALL OTHER SHEETS ARE FOR INTERNAL USE ONLY

UNLESS OTHERWISE SPECIFIED, DIMENSIONS ARE IN METRIC AND TOLERANCES ARE:

<0.5mm	0.5 - 6mm	6 - 30mm	30 - 120mm	ANGLES
± 0.05mm	±0.1mm	±0.2mm	± 0.3mm	±1°

NOTICE - These drawings, specifications, or other data (1) are, and remain the property of Amphenol corp. (2) must be returned upon requiest; and (3) arre confidential and not to be disclosed to any person other than those to whom they are given by Amphenol Corp. the funishing of these drawings, specifications, or other data by Amphenol Corp., or to any other person to anyone for any purpose is not to be regarded by implicatioin or otherwise in any manner licensing, granting rights to permitting such holder or any other sperson to manufacture, use or sell any product, process or design, patented or otherwsie, that may in any way be related to or disclosed by said drawings, specifications, or other data.

MATERIAL
-

REFERENCE
EAR # 1919 AND 615X-1808-100

CONFIGURATION LEVEL: □□□

FINISH

DRAWN J.SHAO	DATE 27-Dec-12
ENGINEER OWEN BARTHELMES	DATE 13-May-02
APPROVED S.HSIEH	DATE 27-Dec-12
CAD FILE I:/SMP/SMP-FSBA-145	

TITLE
ASSEMBLY
SMP,F-F

SCALE: 12.0:1.0 SHEET 2 OF 2

DWG SIZE B REV B

Amphenol RF
Danbury CT USA, Tainan, Taiwan, Shenzhen, China
www.amphenolrf.com

DRAWING NO.	SMP-FSBA-145
ITEM NO.	SMP-FSBA-145
PART NO.	SMP-FSBA-145