Chipsmall Limited consists of a professional team with an average of over 10 year of expertise in the distribution of electronic components. Based in Hongkong, we have already established firm and mutual-benefit business relationships with customers from,Europe,America and south Asia,supplying obsolete and hard-to-find components to meet their specific needs.

With the principle of “Quality Parts,Customers Priority,Honest Operation,and Considerate Service”,our business mainly focus on the distribution of electronic components. Line cards we deal with include Microchip,ALPS,ROHM,Xilinx,Pulse,ON,Everlight and Freescale. Main products comprise IC,Modules,Potentiometer,IC Socket,Relay,Connector.Our parts cover such applications as commercial,industrial, and automotives areas.

We are looking forward to setting up business relationship with you and hope to provide you with the best service and solution. Let us make a better world for our industry!

Contact us

Tel: +86-755-8981 8866 Fax: +86-755-8427 6832
Email & Skype: info@chipsmall.com Web: www.chipsmall.com
Address: A1208, Overseas Decoration Building, #122 Zhenhua RD., Futian, Shenzhen, China

NOTES:

1. PART SHALL BE FREE OF BURRS AND SHARP EDGES
2. ASSURE ASSEMBLY CAPABILITY BY MATCHING WITH MATING PART
3. DIMENSIONS IN [ ] ARE IN MILLIMETERS

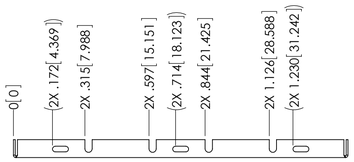

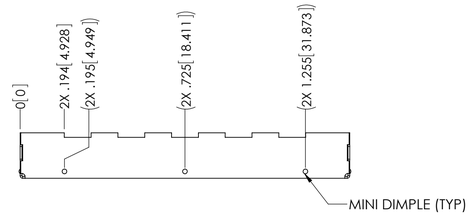

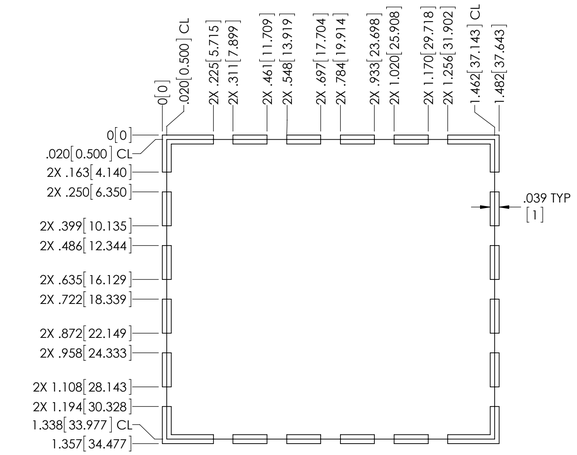

TRACE PATTERN

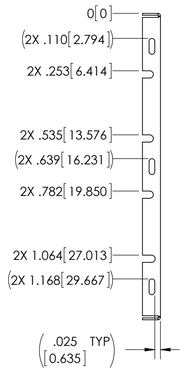

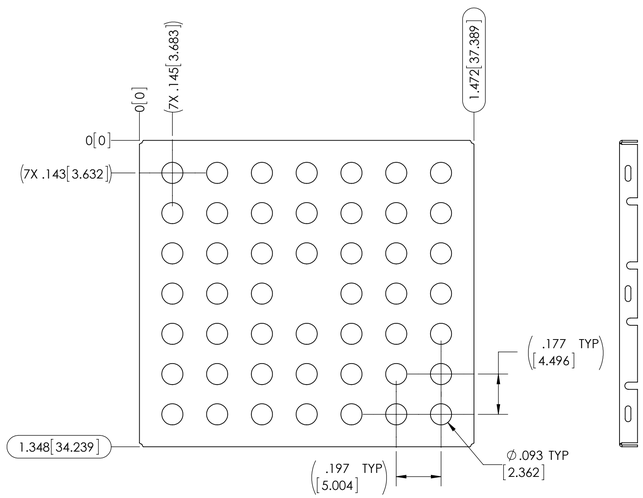

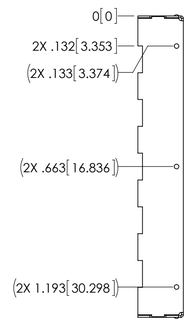

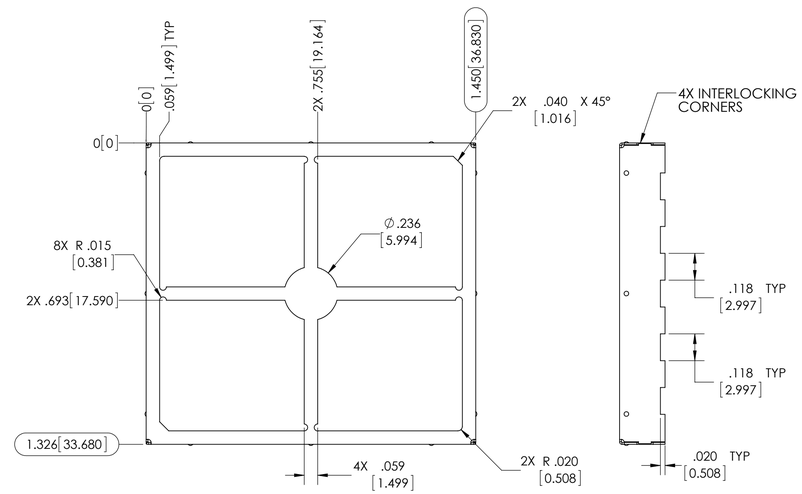

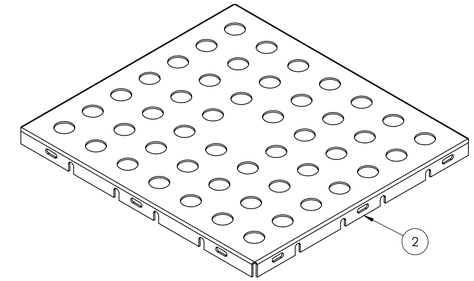

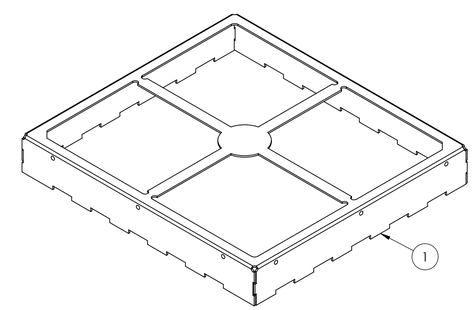

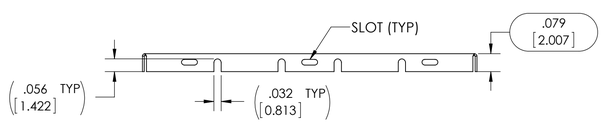

FORMED COVER

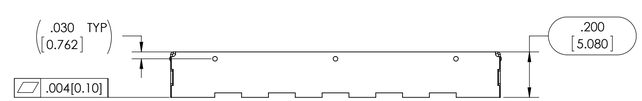

FORMED FRAME

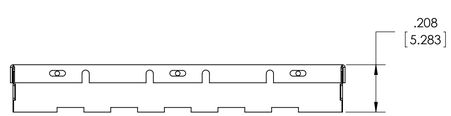

ASSEMBLY

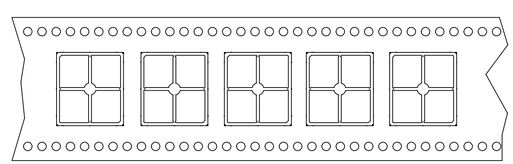

CARRIER TAPE

ITEM NO.	PART NUMBER	DESCRIPTION	QTY.
1	SMS-206 F	FRAME	1
2	SMS-206 C	COVER	1

CARRIER TAPE SPECIFICATIONS

PART NUMBER	DESCRIPTION	OVERALL DIMENSIONS	OVERALL HEIGHT	CARRIER TAPE WIDTH	CARRIER TAPE PITCH	PARTS PER REEL
SMS-206-F	FRAME	1.450 X 1.326 [36.83 X 33.68]	.200 [5.08]	56 mm	40 mm	300
SMS-206-C	COVER	1.472 X 1.348 [37.38 X 34.24]	.079 [2.01]	N/A	N/A	BULK PACK

THIS DOCUMENT CONTAINS PROPRIETARY INFORMATION OWNED BY LEADERTECH, OR DEVELOPED AT ITS OWN PRIVATE EXPENSE, AND MAY NOT BE USED, DUPLICATED, OR DISCLOSED IN WHOLE OR IN PART FOR ANY PURPOSE INCLUDING DESIGN, MANUFACTURE OR PROCUREMENT WITHOUT THE WRITTEN PERMISSION OF LEADERTECH. LEADERTECH DOES NOT GUARANTEE OR WARRANTY THE PERFORMANCE CHARACTERISTICS.

UNLESS OTHERWISE SPECIFIED:
- ALL DIMENSIONS ARE IN INCHES
- PART SHALL BE FREE OF BURRS AND SHARP EDGES
- ALL DIMENSIONS SHOWN APPLY BEFORE PLATINGS AND COATINGS
- RoHS COMPLIANT PER EU DIRECTIVE 2011/65/EU
- POI = POINT OF INTERSECTION

THIRD ANGLE PROJECTION

.XXX +/- .005[0.13] .XX +/- .010[0.25] .X +/- .020[0.51] ANGLES +/- 2°

LEADER TECH a HEICO company
The Leading Edge in EMI Shielding Technology

DRAWN BY: DJ M 09/02/2009
APPROVED BY: -
FINISH: MATTE
MATERIAL: .008[0.20] PRE TIN STEEL

TITLE: SURFACE MOUNT SHIELD

SIZE: D | DWG. NO.: SMS-206 | REV: D
SCALE: 3:1 | CAGE CODE: 4J674 | SHEET: 1 OF 1