Chipsmall Limited consists of a professional team with an average of over 10 year of expertise in the distribution of electronic components. Based in Hongkong, we have already established firm and mutual-benefit business relationships with customers from,Europe,America and south Asia,supplying obsolete and hard-to-find components to meet their specific needs.

With the principle of “Quality Parts,Customers Priority,Honest Operation,and Considerate Service”,our business mainly focus on the distribution of electronic components. Line cards we deal with include Microchip,ALPS,ROHM,Xilinx,Pulse,ON,Everlight and Freescale. Main products comprise IC,Modules,Potentiometer,IC Socket,Relay,Connector.Our parts cover such applications as commercial,industrial, and automotives areas.

We are looking forward to setting up business relationship with you and hope to provide you with the best service and solution. Let us make a better world for our industry!

Contact us

Tel: +86-755-8981 8866 Fax: +86-755-8427 6832
Email & Skype: info@chipsmall.com Web: www.chipsmall.com
Address: A1208, Overseas Decoration Building, #122 Zhenhua RD., Futian, Shenzhen, China

REVISIONS					
REV	ECO	DESCRIPTION	DATE	BY	APPR
B1	-	RELEASED DRAWING	JAN-18-2014	ARROW	TOMMY
B2	-	UPDATE DRAWING	NOV-09-2016	FLAN	TOMMY

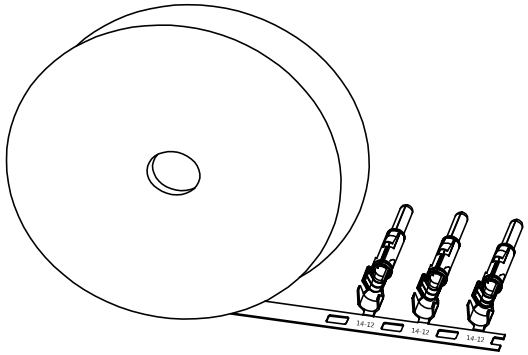

CONTACT ORIENTATION ON ROLL

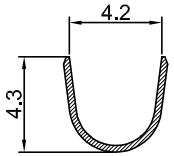

SECTION B-B

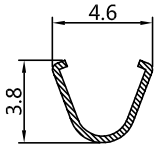

SECTION A-A

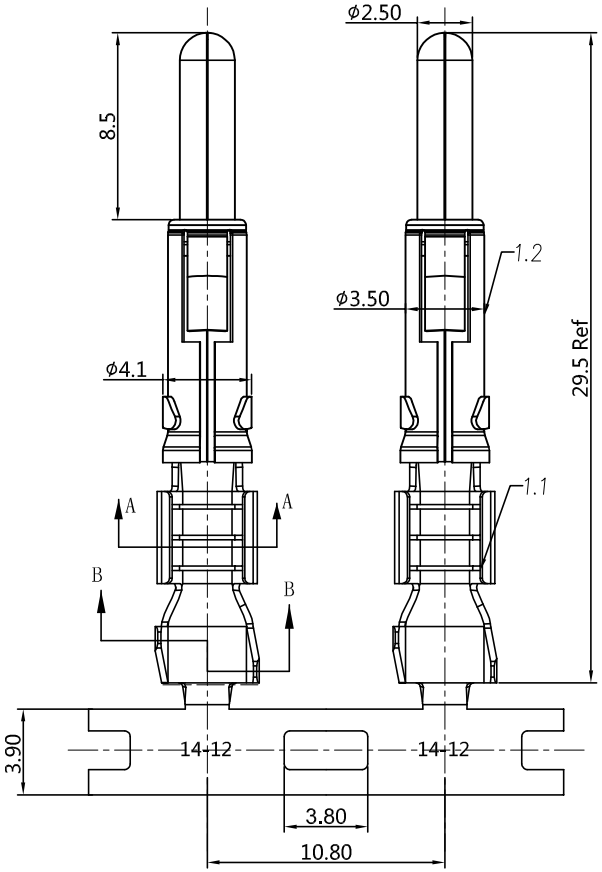

NOTES : (UNLESS OTHERWISE SPECIFIED)
1. MATERIAL :
   1.1. CONTACT BODY : COPPER ALLOY.
   1.2. OUTER SPRING : STAINLESS STEEL.
2. SPECIFICATIONS :
   2.1 CURRENT RATING : 23A MAX.
   2.2 TERMINATION TYPE : CRIMPING.
   2.3 WIRE RANGE : 14~12AWG.
   2.4 WIRE INSULATION DIA(MAX) : ϕ4.3mm.
3. RoHS COMPLIANT.
4. ALL DIMENSIONS ARE FOR REFERENCE USE ONLY.

P/N	CONTACT PLATING(MATING AREA)
SP12A1T	TIN PLATING OVER NICKEL.
SP12A1F	GOLD FLASH PLATING OVER NICKEL.
SP12A1G10	10μ"GOLD PLATING OVER NICKEL.
SP12A1G15	15μ"GOLD PLATING OVER NICKEL.
SP12A1G30	30μ"GOLD PLATING OVER NICKEL.

QUANTITY	PART NUMBER	DESCRIPTION	ITEM

MATERIALS LIST

UNLESS OTHERWISE SPECIFIED
1) All dimensions are in metric(mm).
2) Tolerances are as follows:
1 PL DEC ±0.30 | Fractions ±1/64
2 PL DEC ±0.15 | Angles ±1°
3 PL DEC ±0.08
3) Note reference = X

MATERIAL SPECIFICATIONS:

PROCESS SPECIFICATIONS:

NEXT ASS'Y:

SIGNATURES		DATE
DRAWN:	FLAN	Nov-09-2016
CHECKED:	TOD	Nov-09-2016
ENGINEER:		
APPROVAL:	TOMMY	Nov-09-2016
CUSTOMER:		

THIS DRAWING IS SUPPLIED FOR INFORMATION ONLY. DESIGN FEATURES, SPECIFICATIONS AND PERFORMANCE DATA SHOWN HEREON ARE THE PROPERTY OF THE AMPHENOL CORPORATION. NO RIGHTS OF REPRODUCTION ARE IMPLIED. ALL DIMENSIONS ARE SUBJECT TO NORMAL MANUFACTURING VARIATIONS.

Amphenol
Sine Systems - www.amphenol-sine.com
44724 Morley Drive
Clinton Township, MI 48036

ECO-MATE,PIN CONTACT,
STAMPED, 14-12AWG, 2.5mm CONTACT

SIZE	TYPE	DWG NO:	REVISION
B	C-	SP12A1XX	B2

SCALE: NONE | SHEET 1 OF 1

TITLE: ECO-MATE,PIN CONTACT, STAMPED,14-12AWG, 2.5mm
DWG NO: SP12A1XX
REV: B2
SH: 1
OF: 1