Chipsmall Limited consists of a professional team with an average of over 10 year of expertise in the distribution of electronic components. Based in Hongkong, we have already established firm and mutual-benefit business relationships with customers from,Europe,America and south Asia,supplying obsolete and hard-to-find components to meet their specific needs.

With the principle of “Quality Parts,Customers Priority,Honest Operation,and Considerate Service”,our business mainly focus on the distribution of electronic components. Line cards we deal with include Microchip,ALPS,ROHM,Xilinx,Pulse,ON,Everlight and Freescale. Main products comprise IC,Modules,Potentiometer,IC Socket,Relay,Connector.Our parts cover such applications as commercial,industrial, and automotives areas.

We are looking forward to setting up business relationship with you and hope to provide you with the best service and solution. Let us make a better world for our industry!

Contact us

Tel: +86-755-8981 8866 Fax: +86-755-8427 6832
Email & Skype: info@chipsmall.com Web: www.chipsmall.com
Address: A1208, Overseas Decoration Building, #122 Zhenhua RD., Futian, Shenzhen, China

Switching Power Supply
Type SPDM 50
DIN Rail Mounting

- Universal input 85~264Vac
- Short circuit protection
- Internal input filter
- High efficiency up to 87%
- High average efficiency meets ErP 2009/125/EC
- Low standby power consumption
- 3 years warranty

Product Description

The Switching power supplies SPDM Series are specially designed to be used in all automation application where the installation is on a DIN rail and compact dimensions and performance are a must. In particular the SPDM Series power supplies are significantly smaller than the standard power supplies of the same power.The greater compactness is achieved thanks to limited energy loss, that automatically generates greater effectiveness. This specific SPDM Series 50W Power supplies are available with 12VDC or 24VDC Output Voltage, with spring or screw terminals.

Ordering Key

SP D M 12 50 1 B

- **Model**
- **Mounting (D = Din rail)**
- **Medium Width**
- **Output voltage**
- **Size**
- **Input type**
- **Spring terminal (Nil= Screw terminal)**

Approvals

IND. CONT. EQ. UL508

Output Performance

Model NO.	Output voltage	Output wattage	Output current	Eff. (Min.)	Eff. (Typ.)	Eff. (avg)
SPDM1250	+12VDC	48 Watt	4A	84%	86%	87%
SPDM2450	+24VDC	50 Watt	2.1A	85%	87%	87%

Output Data **All specifications are at nominal values, full load, 25°C (77°F) unless otherwise noted**

Ripple & noise		
Vi nom, Io nom, BW=20MHz		100mV
Minimum load Vi nom		0%
Voltage accuracy		
Io nom, Io max		+1%
Line regulation		
Vi nom, Vi min. ... Vi max.		±1%
Load regulation		
Vi nom, Io min. ... Io nom.		±1%
Voltage trim range		
0.8 Io nom	12V	11.4 ~ 15.6V
	24V	22.5 ~ 28.5V
Rated continuous loading		
Vi nom	12V	4A@12VDC/1.6A@15VDC
	24V	2.1A@24VDC/1A@28.5VDC
Turn on time		
Vi nom, Io nom		1000ms
Vi nom, Io nom with 3500 µF CAP		1500ms

Hold up time		
Vi: 115/230VAC, Io nom		20 / 50ms
Transient recovery time		
Vi nom 1~0.5 Io nom		2ms
Power back immunity		
Vi nom, Io nom		
1 second	12V	22VDC
	24V	35VDC
Capacitor load		
Vi nom, Io nom		3500µF
DC ON indicator threshold at start up (Green LED)		
	12V	9.6 ~ 10.8VDC
	24V	19.2 ~ 21.6VDC
Efficiency		
Vi nom, Io nom Po / Pi		Up to 87%, see model list and typ efficiency curve

CARLO GAVAZZI

Input Data All specifications are at nominal values, full load, 25°C (77°F) unless otherwise noted

Rated input voltage Io nom	100VAC min 240VAC max
Voltage range	
AC in	85 ~ 264VAC
DC in	120 ~ 375VDC
Line frequency	
Vi nom, Io nom	47 / 63Hz
AC Current (typ.)	
Vi: 115VAC	1000mA
Vi: 230VAC	500mA
Inrush current	
Vi: 115/230VAC, Io nom	30 / 60A

Leakage current	
Input-Ouput	0.25mA
Input-FG	3.5mA
Rated input current (max.)	
Vi: 85VAC, Io nom	1400 mA
Power dissipation	
Vi: 230VAC, Io nom 12V	8.0W
24V	8.8W
Standby power consumption	
Vi nom, IO=0A	0.3W

Controls and Protections All specifications are at nominal values, full load, 25°C (77°F) unless otherwise noted

Over load	
Vi nom (see typ current limited curve)	150%
Over voltage	
Vi nom, 0.8 Io nom (auto recovery)	
12V	16.2 ~ 18VDC
24V	28.8 ~ 32.4VDC

Output short circuit	Hiccup mode
Input fuse	T2A / 250VAC internal
Internal suge voltage protection	
IEC 61000-4-5	Varistor
Degree of protection	IP20

General Data All specifications are at nominal values, full load, 25°C (77°F) unless otherwise noted

Operating temperature	
Operating at Vi nom	-25 ~ +71°C (-13 ~ 159.8°F)
Ambient humidity	
Vi nom, Io nom	20 ~ 95% RH
Storage temperature	
Non operational	-40 ~ +85°C (-40 ~ 185°F)
MTBF	
Bellcore issue 6@40°C, GB	
12V	556000 Hours
24V	580000 Hours
Cooling method	Free air convection
Dimensions HxDxW	90 x 100 x 30mm (3.54” x 3.937” x 1.181”)
Weight	200g (0.441lb)
Packing	
Single	220g (0,485lb)
Carton	48pcs 12kg (26.45lb) 2.16CUFT

Switching frequency	
Vi nom, Io nom	65KHz
Insulation voltage	
Input - Output	3000 / 4242VAC / VDC
Input - FG	1500 / 2121VAC / VDC
Output - FG	500 / 710VAC / VDC
Insulation resistance	
Input - Output, @500VDC	100MΩ
Derating (see diagram)	
Vi nom, from +51°C (123°F)	2.5%/°K
Temperature coefficient	
Vi nom, Io min	±0.03%/°K
Altitude during operation	
EN60950-1	5000m AMSL (16,400ft)
Pollution degree	2
Case material	Plastic

Norms and Standard

All specifications are at nominal values, full load, 25°C (77°F) unless otherwise noted

UL / cUL	UL508 Listed
UL1310	Class 2 (pending)
cTUVus	UL60950-1
TUV	EN60950-1
CE	EN61000-6-3, EN55022 Class B, EN61000-3-2, EN61000-3-3 EN61000-6-2, EN55024, EN61000-4-2 Level 4, EN61000-4-3 Level 3, EN61000-4-4 Level 4, EN61000-4-5 L-N Level 3.L/N-FG Level 4, EN61000-4-6 Level 3, EN61000-4-8 Level 4, EN691000-4-11, ENV 50204 Level 2, EN61204-3

Vibration resistance	Meets IEC 60068-2-6 Mounting on rail: 10-500 Hz, 2G, along X, Y, Z each Axis, 60 min for each Axis)
Shock resistance	Meets IEC 60068-2-27 (15G, 11ms, 3Axis, 6Faces, 3 times for each Face)

Block Diagram

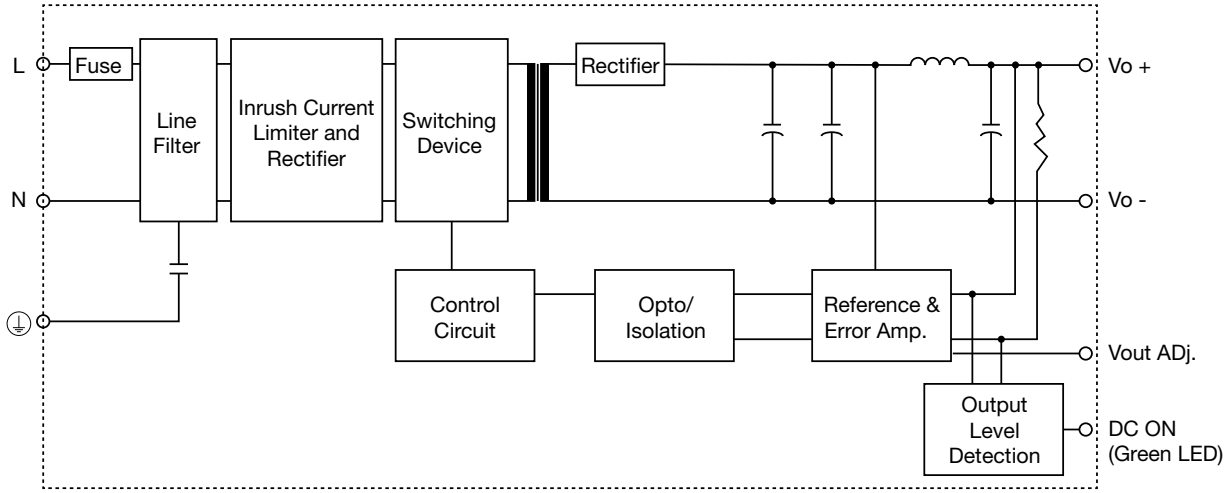

Diagram Curve

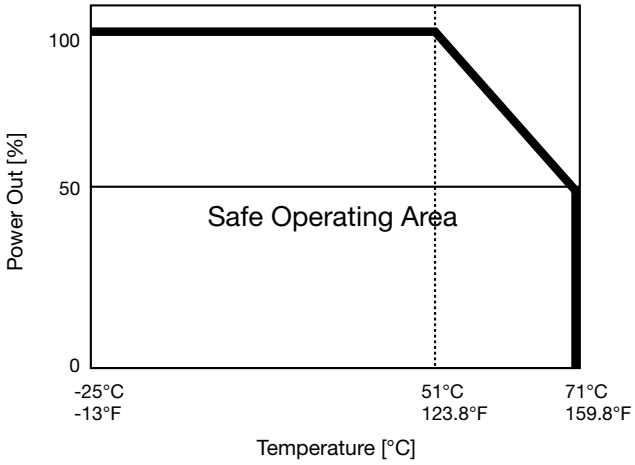

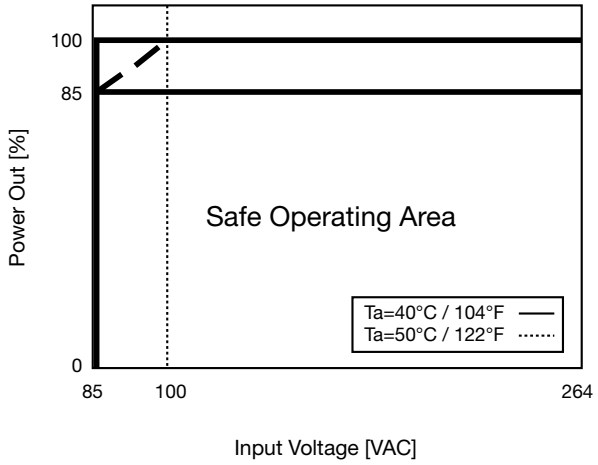

Typ. Current Limited Curve

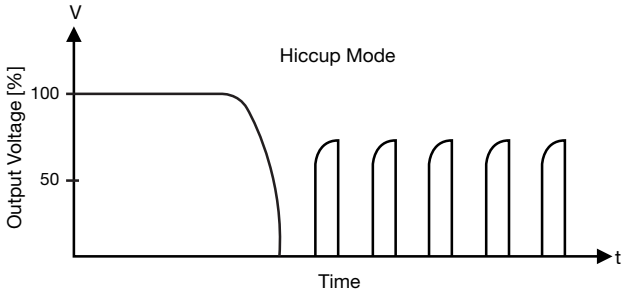

Typ. Efficiency Curve

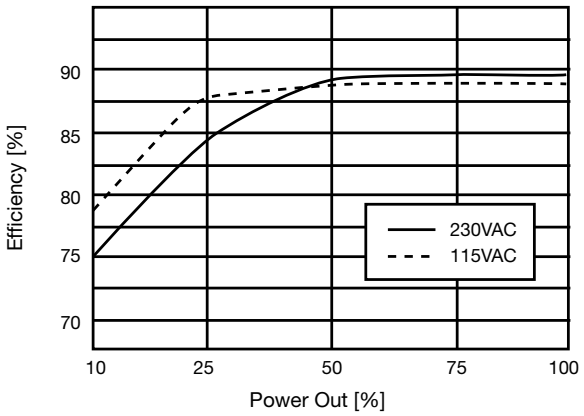

Pin Assignement and Front Controls

PIN NO.	Designation	Description
1, 2	V+	Positive output terminal
3, 4	V-	Negative output terminal
5	⏚	Ground this terminal to minimize high frequency emissions
6	N	Input terminals (neutral conductor, no polarity with DC input)
7	L	Input terminals (phase conductor, no polarity with DC input)
	DC ON	Operation indicator LED
	Vout ADj.	Trimmer-potentiometer for Vout adjustment

Mechanical Drawings mm (inches)