Chipsmall Limited consists of a professional team with an average of over 10 year of expertise in the distribution of electronic components. Based in Hongkong, we have already established firm and mutual-benefit business relationships with customers from,Europe,America and south Asia,supplying obsolete and hard-to-find components to meet their specific needs.

With the principle of “Quality Parts,Customers Priority,Honest Operation,and Considerate Service”,our business mainly focus on the distribution of electronic components. Line cards we deal with include Microchip,ALPS,ROHM,Xilinx,Pulse,ON,Everlight and Freescale. Main products comprise IC,Modules,Potentiometer,IC Socket,Relay,Connector.Our parts cover such applications as commercial,industrial, and automotives areas.

We are looking forward to setting up business relationship with you and hope to provide you with the best service and solution. Let us make a better world for our industry!

Contact us

Tel: +86-755-8981 8866 Fax: +86-755-8427 6832
Email & Skype: info@chipsmall.com Web: www.chipsmall.com
Address: A1208, Overseas Decoration Building, #122 Zhenhua RD., Futian, Shenzhen, China

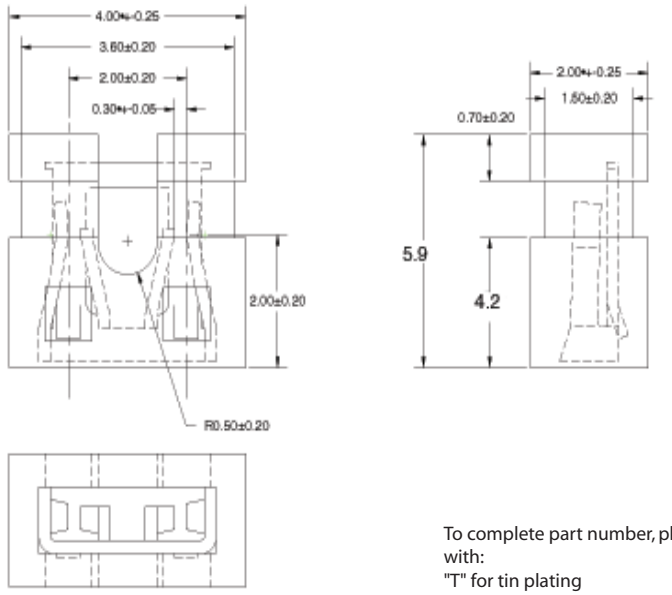

To complete part number, please replace "x" with:
"T" for tin plating
"P" for gold flash

SULLINS 691 E. MISSION RD. SAN MARCOS, CA 92069	GENERAL TOLERANCE XX +- / XXX +- X +- 0.20 / XXX +- .X +- 0.10 / X.X +- .XX +- 0.05 / XX.X +-	SCALE 15:1 UNIT MM SIZE A4	DRAWN CHECK APPROVE	DATE DATE DATE	DWG. NO. T0026 PARTS NO. SxN02SYBN	TITLE	REV. SHEET