Chipsmall Limited consists of a professional team with an average of over 10 year of expertise in the distribution of electronic components. Based in Hongkong, we have already established firm and mutual-benefit business relationships with customers from,Europe,America and south Asia,supplying obsolete and hard-to-find components to meet their specific needs.

With the principle of “Quality Parts,Customers Priority,Honest Operation,and Considerate Service”,our business mainly focus on the distribution of electronic components. Line cards we deal with include Microchip,ALPS,ROHM,Xilinx,Pulse,ON,Everlight and Freescale. Main products comprise IC,Modules,Potentiometer,IC Socket,Relay,Connector.Our parts cover such applications as commercial,industrial, and automotives areas.

We are looking forward to setting up business relationship with you and hope to provide you with the best service and solution. Let us make a better world for our industry!

Contact us

Tel: +86-755-8981 8866 Fax: +86-755-8427 6832
Email & Skype: info@chipsmall.com Web: www.chipsmall.com
Address: A1208, Overseas Decoration Building, #122 Zhenhua RD., Futian, Shenzhen, China

REVISIONS					
REV	ECO	DESCRIPTION	DATE	BY	APPR
B1	-	RELEASED DRAWING	JAN-18-2014	ARROW	TOMMY

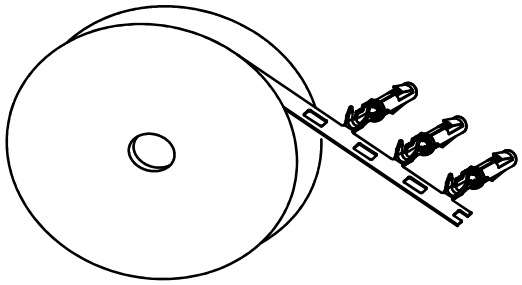

CONTACT ORIENTATION ON ROLL

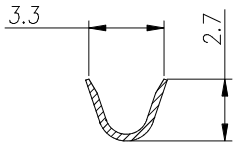

SECTION A-A

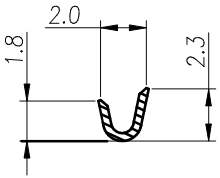

SECTION B-B

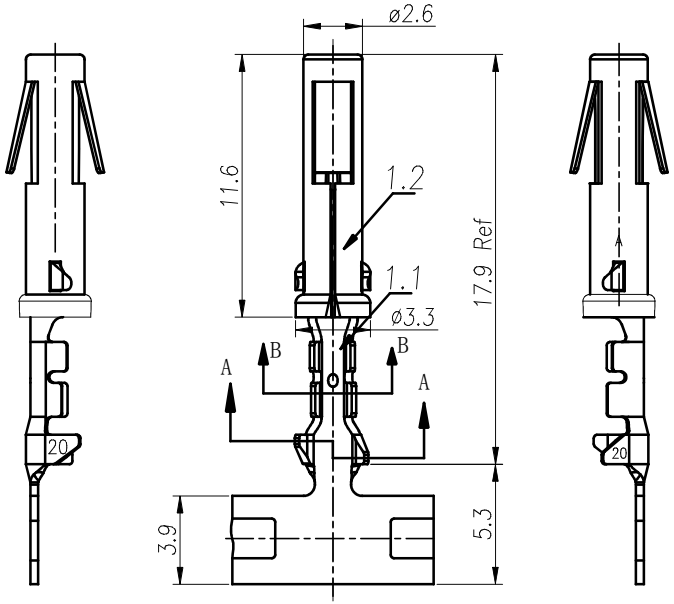

NOTES : (UNLESS OTHERWISE SPECIFIED)

1. MATERIAL :
- **1.1. CONTACT BODY : COPPER ALLOY.**
- **1.2. OUTER SPRING : STAINLESS STEEL.**

2. SPECIFICATIONS :
- **2.1 CURRENT RATING : 13A MAX.**
- **2.2 TERMINATION TYPE : CRIMPING.**
- **2.3 WIRE RANGE : 20~22AWG.**
- **2.4 WIRE INSULATION DIA(MAX) : Ø3.2mm.**

3. ROHS COMPLIANT.

4. ALL DIMENSIONS ARE FOR REFERENCE USE ONLY.

5. AVAILABLE TOOLS :
- **5.1 HAND CRIMPER : MFX-3954.**
- **5.2 CRIMP APPLICATOR : MFX-3957.**
- **5.3 EXTRACTION TOOL : QXRT16.**

P/N	CONTACT PLATING(MATING AREA)
SS20M1T	TIN PLATING OVER NICKEL.
SS20M1F	GOLD FLASH PLATING OVER NICKEL.
SS20M1G10	10μ"GOLD PLATING OVER NICKEL.
SS20M1G15	15μ"GOLD PLATING OVER NICKEL.
SS20M1G30	30μ"GOLD PLATING OVER NICKEL.

QUANTITY	PART NUMBER	DESCRIPTION	ITEM

MATERIALS LIST

UNLESS OTHERWISE SPECIFIED
1) All dimensions are in metric(mm).
2) Tolerances are as follows:
1 PL DEC ±0.30 | Fractions ±1/64
2 PL DEC ±0.15 | Angles ±1°
3 PL DEC ±0.08
3) Note reference – X

MATERIAL SPECIFICATIONS:

PROCESS SPECIFICATIONS:

NEXT ASS'Y:

SIGNATURES		DATE
DRAWN:	ARROW	JAN-17-2014
CHECKED:		
ENGINEER:		
APPROVAL:		
CUSTOMER:		

THIS DRAWING IS SUPPLIED FOR INFORMATION ONLY. DESIGN FEATURES, SPECIFICATIONS AND PERFORMANCE DATA SHOWN HEREON ARE THE PROPERTY OF THE AMPHENOL CORPORATION. NO RIGHTS OF REPRODUCTION ARE IMPLIED. ALL DIMENSIONS ARE SUBJECT TO NORMAL MANUFACTURING VARIATIONS.

Amphenol

Sine Systems - www.amphenol-sine.com
44724 Morley Drive
Clinton Township, MI 48036

ECO-MATE,SOCKET CONTACT, STAMPED, 20-22AWG, SIZE 16

SIZE	TYPE	DWG NO:	REVISION
B	C-	SS20M1xx	B1

SCALE: NONE

SHEET 1 OF 1

TITLE: ECO-MATE,SOCKET CONTACT, STAMPED, 20-22AWG, SIZE 16
DWG NO: SS20M1xx
REV: B1
SH: 1
OF: 1