Chipsmall Limited consists of a professional team with an average of over 10 year of expertise in the distribution of electronic components. Based in Hongkong, we have already established firm and mutual-benefit business relationships with customers from,Europe,America and south Asia,supplying obsolete and hard-to-find components to meet their specific needs.

With the principle of “Quality Parts,Customers Priority,Honest Operation,and Considerate Service”,our business mainly focus on the distribution of electronic components. Line cards we deal with include Microchip,ALPS,ROHM,Xilinx,Pulse,ON,Everlight and Freescale. Main products comprise IC,Modules,Potentiometer,IC Socket,Relay,Connector.Our parts cover such applications as commercial,industrial, and automotives areas.

We are looking forward to setting up business relationship with you and hope to provide you with the best service and solution. Let us make a better world for our industry!

Contact us

Tel: +86-755-8981 8866 Fax: +86-755-8427 6832
Email & Skype: info@chipsmall.com Web: www.chipsmall.com
Address: A1208, Overseas Decoration Building, #122 Zhenhua RD., Futian, Shenzhen, China

DATE	REV	ECN	APP'D. BY
5-4-06	A2	7616	TRM
7-27-06	A3	7691	TRM

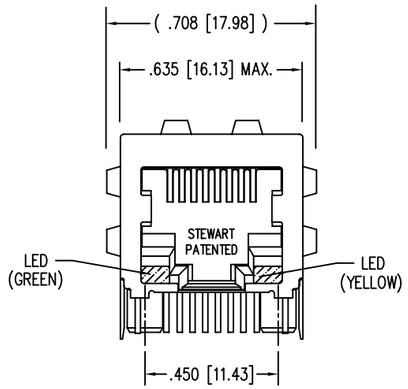

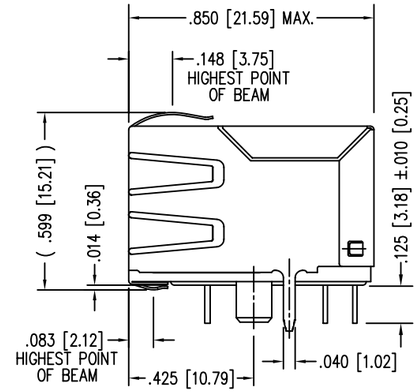

LED POLARITY
(ENLARGED VIEW)

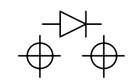

SINGLE COLOR LED

LED SPECIFICATIONS			
STANDARD LED	FORWARD VOLTAGE (MAX)	* FORWARD VOLTAGE (TYP)	WAVELENGTH
GREEN	2.5 V	2.2 V	565 nm
YELLOW	2.5 V	2.1 V	590 nm

* WITH A FORWARD CURRENT OF 20 mA (TYP)

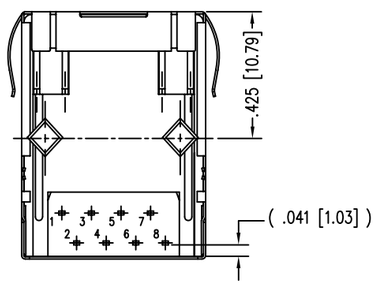

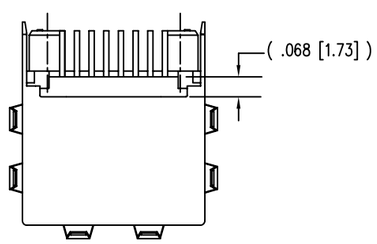

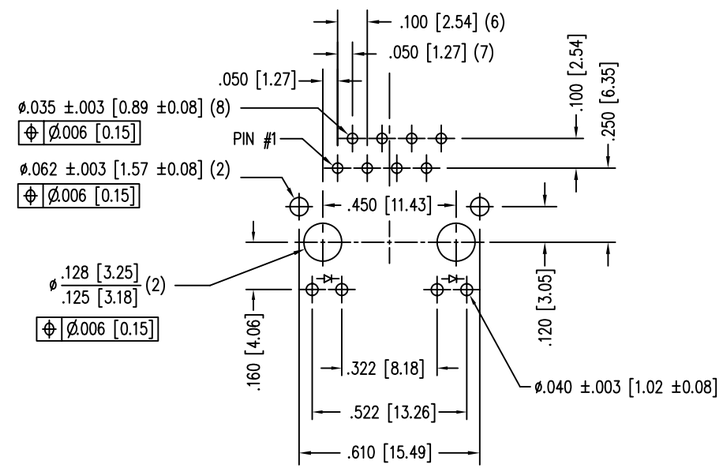

P.C.B. RECOMMENDED HOLE LAYOUT
SEEN FROM COMPONENT SIDE

ALL CENTERLINE DIMENSIONS ARE BASIC.

NOTES:

1. CONNECTOR MATERIALS:
   HOUSING: THERMOPLASTIC UL94 V-0
   CONTACTS/SHIELD: COPPER ALLOY
   SHIELD PLATING: NICKEL OR TIN
   CONTACT PLATING: SELECTIVE GOLD IN CONTACT AREA
   SEE CHART FOR PART NUMBER
2. DESIGNED FOR CATEGORY 5/5e APPLICATIONS.
3. DIMENSIONS AND TOLERANCES COMPLY WITH FCC/CFR 47, PART 68.
4. FOR PRODUCT SPECIFICATIONS SEE PR022-01
5. THE SUGGESTED PANEL OPENING IS INTENDED TO GIVE USER THE ABILITY TO HAVE REASONABLE JACK/PANEL CLEARANCES, YET MAINTAIN GROUNDING CAPABILITY. THESE VARIABLES CAN BE ADJUSTED IN EITHER DIRECTION BUT MAY CARRY SOME CONSEQUENCES IN THE FORM OF LOWER MATING FORCES OR TIGHTER ASSEMBLY TOLERANCES.

30 MICRO-INCHES [0.76um]	SS74800-031F
CONTACT PLATING IN MATING AREA	PART NUMBER

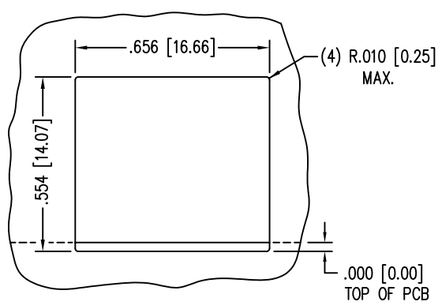

SUGGESTED PANEL OPENING

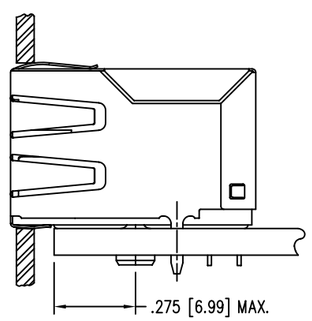

RoHS 2002/95/EC

THIRD ANGLE PROJECTION

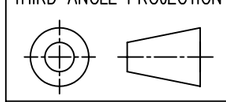

DO NOT SCALE DRAWING

DRAWING IS SUBJECT TO CHANGE WITHOUT NOTICE

DIMENSIONS: INCHES [METRIC]

UNLESS OTHERWISE SPECIFIED TOLERANCES ARE ±.005 [0.13] ANGLES ARE ± 1°

SHEET NO. 1 OF 1

Bel Stewart Connector

11118 Susquehanna Trail South
Glen Rock, PA 17327-9199
(717) 235-7512 Fax: (717) 235-7954 http://www.stewartconnector.com

TITLE: EMI-RFI ONE PIECE SHIELDED, ESD GROUNDED SINGLE PORT CAT 5 LED JACK

THIS DRAWING AND THE SUBJECT MATTER SHOWN THEREON ARE CONFIDENTIAL AND THE PROPRIETARY PROPERTY OF BEL STEWART CONNECTOR AND SHALL NOT BE REPRODUCED, COPIED, OR USED IN ANY MANNER WITHOUT PRIOR WRITTEN CONSENT OF BEL STEWART CONNECTOR. THE SUBJECT MATTER MAY BE PATENTED OR A PATENT MAY BE PENDING.

DRN BY:	RVO	DATE	4-8-05
APPD BY:	RGC	DATE	4-8-05
DWG NO.	CT740091F	REV.	A3

REV. 7/3/03

AutoCAD