Chipsmall Limited consists of a professional team with an average of over 10 year of expertise in the distribution of electronic components. Based in Hongkong, we have already established firm and mutual-benefit business relationships with customers from,Europe,America and south Asia,supplying obsolete and hard-to-find components to meet their specific needs.

With the principle of “Quality Parts,Customers Priority,Honest Operation,and Considerate Service”,our business mainly focus on the distribution of electronic components. Line cards we deal with include Microchip,ALPS,ROHM,Xilinx,Pulse,ON,Everlight and Freescale. Main products comprise IC,Modules,Potentiometer,IC Socket,Relay,Connector.Our parts cover such applications as commercial,industrial, and automotives areas.

We are looking forward to setting up business relationship with you and hope to provide you with the best service and solution. Let us make a better world for our industry!

Contact us

Tel: +86-755-8981 8866 Fax: +86-755-8427 6832
Email & Skype: info@chipsmall.com Web: www.chipsmall.com
Address: A1208, Overseas Decoration Building, #122 Zhenhua RD., Futian, Shenzhen, China

UNCONTROLLED DOCUMENT

PART NUMBER	REV.
SSF-LXH305SGD(-TR)	A

REV.	E.C.N. NUMBER AND REVISION COMMENTS	DATE
A	E.C.N. #10864.	05/04/05

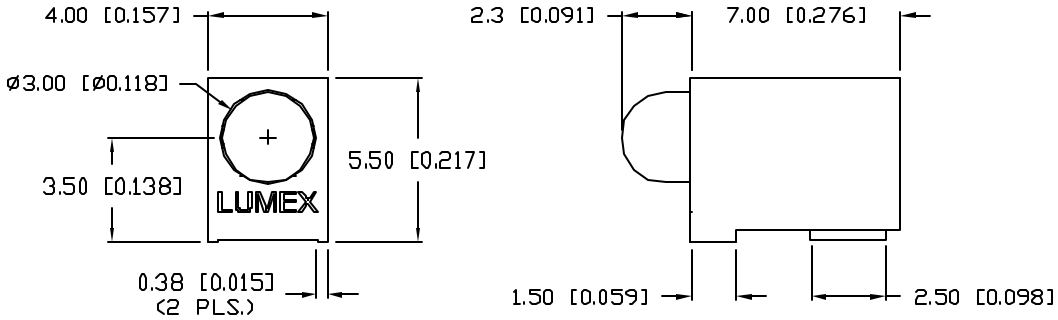

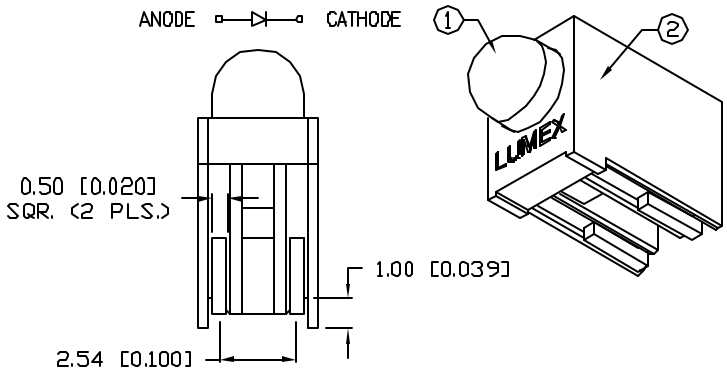

REFLOW PROFILE

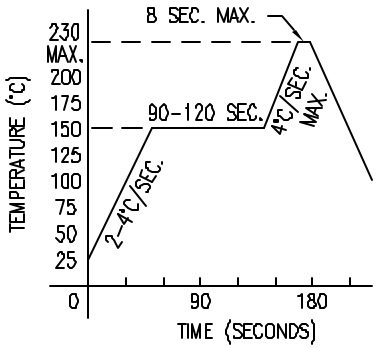

PATENT PENDING

ELECTRO-OPTICAL CHARACTERISTICS T_A=25°C I_f=20mA

PARAMETER	MIN	TYP	MAX	UNITS	TEST COND
PEAK WAVELENGTH		565		nm	
FORWARD VOLTAGE		2.2	2.6	V_f	
REVERSE VOLTAGE	5.0			V_r	I_r=100µA
AXIAL INTENSITY		150		mcd	I_f=20mA
VIEWING ANGLE		60		2x theta	
EMITTED COLOR:	GREEN				
EPOXY LENS FINISH:	GREEN DIFFUSED				

LIMITS OF SAFE OPERATION AT 25°C

PARAMETER	MAX	UNITS
PEAK FORWARD CURRENT*	150	mA
STEADY CURRENT	30	mA
POWER DISSIPATION	100	mW
DERATE FROM 25°C	-1.6	mW/°C
OPERATING, STORAGE TEMP.	-40 TO +85	°C
SOLDERING TEMP.	+230	°C 3 SEC. MAX

* t<10µS

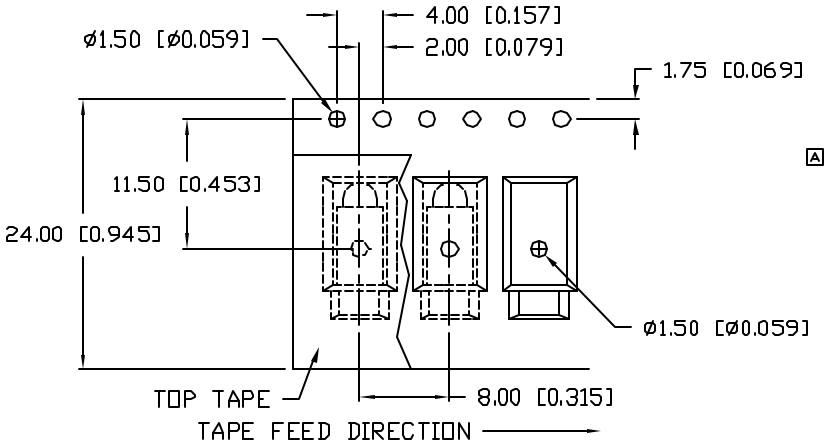

A RECOMMENDED SOLDER PAD LAYOUT

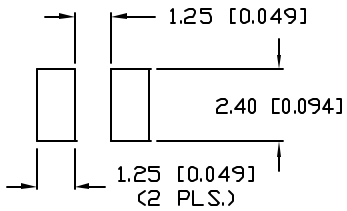

NOTES:

1. SSL-LX305F4SGD, RED LED.
2. SSH-LXH305, BLACK HOLDER.
3. -TR SUFFIX TO DESIGNATE TAPE AND REEL SUPPLIED.
4. CARRIER TAPE #LXP-CARRIER24-56.

UNCONTROLLED DOCUMENT

*UNLESS OTHERWISE SPECIFIED TOLERANCES PER DECIMAL PRECISION ARE: X=±1 (±0.039), X.X=±0.5 (±0.020), X.XX=±0.25 (±0.010), X.XXX=±0.127 (±0.005). LEAD SIZE=±0.05 (±0.002), LEAD LENGTH=±0.75 (±0.030). MIN=$^{+\text{DECIMAL PRECISION}}_{-0.00}$ MAX.=$^{+0.00}_{-\text{DECIMAL PRECISION}}$

REV.	PART NUMBER
A	SSF-LXH305SGD(-TR)

T-3mm (T-1) RIGHT ANGLE SURFACE MOUNT LED,
565nm SUPER GREEN DIFFUSED,
GREEN DIFFUSED LENS, TAPE AND REEL.

CONFIDENTIAL INFORMATION
THE INFORMATION CONTAINED IN THIS DOCUMENT IS THE PROPERTY OF LUMEX INC. EXCEPT AS SPECIFICALLY AUTHORIZED IN WRITING BY LUMEX INC., THE HOLDER OF THIS DOCUMENT SHALL KEEP ALL INFORMATION CONTAINED HEREIN CONFIDENTIAL AND SHALL PROTECT SAME IN WHOLE OR IN PART FROM DISCLOSURE AND DISSEMINATION TO ALL THIRD PARTIES.

RELIABILITY NOTE
OUR MANY YEARS OF EXPERIENCE DATA ACCUMULATION INDICATE THAT SOLDER HEAT IS A MAJOR CAUSE OF EARLY AND FUTURE FAILURE. PLEASE PAY ATTENTION TO YOUR SOLDERING PROCESS.

290 E. HELEN ROAD
PALATINE, IL 60067-6976
PHONE: +1.847.359.2790
US WEB: www.lumex.com
TW WEB: www.lumex.com.tw

DRAWN BY:	CHECKED BY:	APPROVED BY:	DATE: 2.16.01
CT			PAGE: 1 OF 1
			SCALE: N/A