Chipsmall Limited consists of a professional team with an average of over 10 year of expertise in the distribution of electronic components. Based in Hongkong, we have already established firm and mutual-benefit business relationships with customers from,Europe,America and south Asia,supplying obsolete and hard-to-find components to meet their specific needs.

With the principle of “Quality Parts,Customers Priority,Honest Operation,and Considerate Service”,our business mainly focus on the distribution of electronic components. Line cards we deal with include Microchip,ALPS,ROHM,Xilinx,Pulse,ON,Everlight and Freescale. Main products comprise IC,Modules,Potentiometer,IC Socket,Relay,Connector.Our parts cover such applications as commercial,industrial, and automotives areas.

We are looking forward to setting up business relationship with you and hope to provide you with the best service and solution. Let us make a better world for our industry!

Contact us

Tel: +86-755-8981 8866 Fax: +86-755-8427 6832
Email & Skype: info@chipsmall.com Web: www.chipsmall.com
Address: A1208, Overseas Decoration Building, #122 Zhenhua RD., Futian, Shenzhen, China

DATE	REVISIONS	REV

DRAWING NUMBER: SSL-LXA227GD

REV

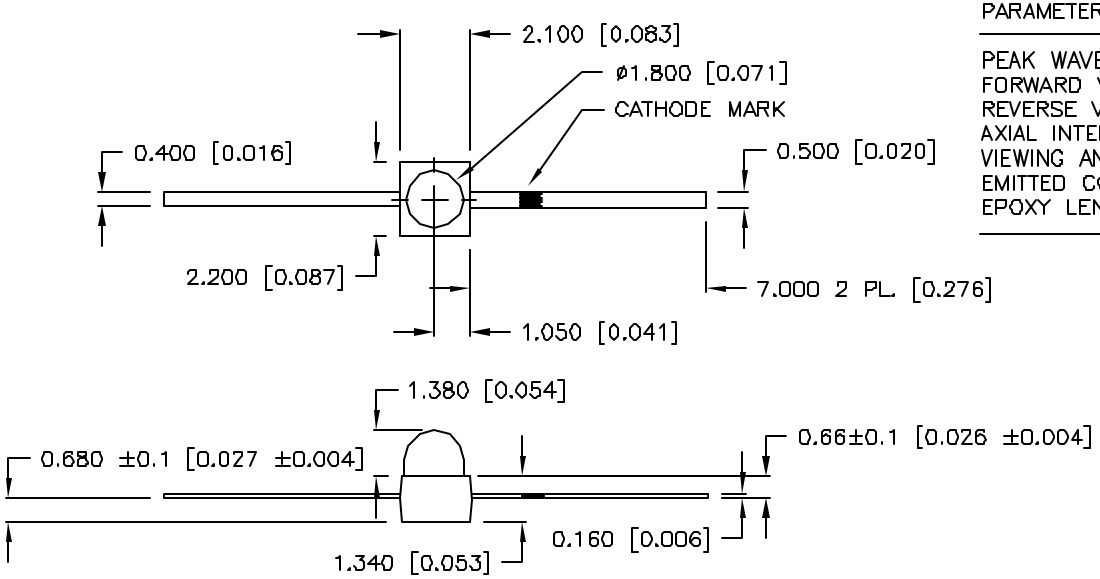

ELECTRO-OPTICAL CHARACTERISTICS $T_A = 25°C$ $I_F = 20mA$

PARAMETER	MIN	TYP	MAX	UNITS	TEST COND
PEAK WAVELENGTH		565 (GREEN)		nm	
FORWARD VOLTAGE		2.1	2.8	V_f	
REVERSE VOLTAGE	5.0			V_r	$I_r = 100uA$
AXIAL INTENSITY		8		mcd	$I_f = 20mA$
VIEWING ANGLE		60		2x theta	
EMITTED COLOR	GREEN				
EPOXY LENS FINISH	GREEN DIFFUSED				

LIMITS OF SAFE OPERATION AT 25°C

PARAMETER	MAX	UNITS
PEAK FORWARD CURRENT*	160	mA
STEADY CURRENT	30	mA
POWER DISSIPATION	100	mW
DERATE FROM 25°C	-1.2	mW/°C
OPERATING, STORAGE TEMP	-40 TO +85	°C
LEAD SOLDERING TEMP	+260	°C
2.0mm FROM BODY		3 SEC. MAX

* t<10uS

RELIABILITY NOTE:

OUR MANY YEARS OF EXPERIENCE DATA ACCUMULATION INDICATE THAT SOLDER HEAT IS A MAJOR CAUSE OF EARLY AND FUTURE FAILURE. PLEASE PAY ATTENTION TO YOUR SOLDERING PROCESS.

UNLESS OTHERWISE SPECIFIED TOLERANCE IS ±.25mm (±0.010")

LUMEX OPTO COMPONENTS INC.

290 E. HELLEN ROAD
PALATINE, ILLINOIS 60067
(847) 359-2790

CONFIDENTIAL INFORMATION
THE INFORMATION CONTAINED IN THIS DOCUMENT IS THE PROPERTY OF LUMEX OPTO/COMPONENTS, INC. EXCEPT AS SPECIFICALLY AUTHORIZED IN WRITING BY LUMEX OPTO/COMPONENTS, INC., THE HOLDER OF THIS DOCUMENT SHALL KEEP ALL INFORMATION CONTAINED HEREIN CONFIDENTIAL AND SHALL PROTECT SAME IN WHOLE OR IN PART FROM DISCLOSURE AND DISSEMINATION TO ALL THIRD PARTIES.

DATE: 7-8-97	DWN:	CHK'D:	APPD:
SCALE: N/A			

AXIAL LED, GREEN DIFFUSED

DRAWING NUMBER: SSL-LXA227GD

REV