Chipsmall Limited consists of a professional team with an average of over 10 year of expertise in the distribution of electronic components. Based in Hongkong, we have already established firm and mutual-benefit business relationships with customers from,Europe,America and south Asia,supplying obsolete and hard-to-find components to meet their specific needs.

With the principle of “Quality Parts,Customers Priority,Honest Operation,and Considerate Service”,our business mainly focus on the distribution of electronic components. Line cards we deal with include Microchip,ALPS,ROHM,Xilinx,Pulse,ON,Everlight and Freescale. Main products comprise IC,Modules,Potentiometer,IC Socket,Relay,Connector.Our parts cover such applications as commercial,industrial, and automotives areas.

We are looking forward to setting up business relationship with you and hope to provide you with the best service and solution. Let us make a better world for our industry!

Contact us

Tel: +86-755-8981 8866 Fax: +86-755-8427 6832
Email & Skype: info@chipsmall.com Web: www.chipsmall.com
Address: A1208, Overseas Decoration Building, #122 Zhenhua RD., Futian, Shenzhen, China

STGIPS10K60A2

SLLIMM™ small low-loss intelligent molded module IPM, 3-phase inverter, 10 A, 600 V short-circuit rugged IGBT

Datasheet - production data

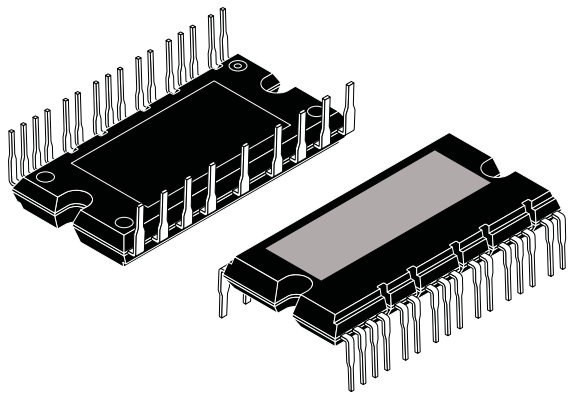

SDIP-25L

Features

- IPM 10 A, 600 V, 3-phase IGBT inverter bridge including control ICs for gate driving and free-wheeling diodes
- Short-circuit rugged IGBT
- $V_{CE(sat)}$ negative temperature coefficient
- 3.3 V, 5 V, 15 V CMOS/TTL inputs comparators with hysteresis and pull-down resistor
- Undervoltage lockout
- Internal bootstrap diode
- Interlocking function
- DBC substrate leading to low thermal resistance
- Isolation rating of 2500 V_{rms}/min
- 4.7 kΩ NTC for temperature control
- UL recognized: UL1557 file E81734

Applications

- 3-phase inverters for motor drives
- Home appliances, such as washing machines, refrigerators, air conditioners

Description

This intelligent power module provides a compact, high performance AC motor drive in a simple, rugged design. Combining ST proprietary control ICs with the most advanced short-circuit-rugged IGBT system technology, this device is ideal for 3-phase inverters in applications such as home appliances and air conditioners. SLLIMM™ is a trademark of STMicroelectronics.

Table 1. Device summary

Order code	Marking	Package	Packing
STGIPS10K60A2	GIPS10K60A2	SDIP-25L	Tube

Contents

1 Internal block diagram and pin configuration

Figure 1. Internal block diagram

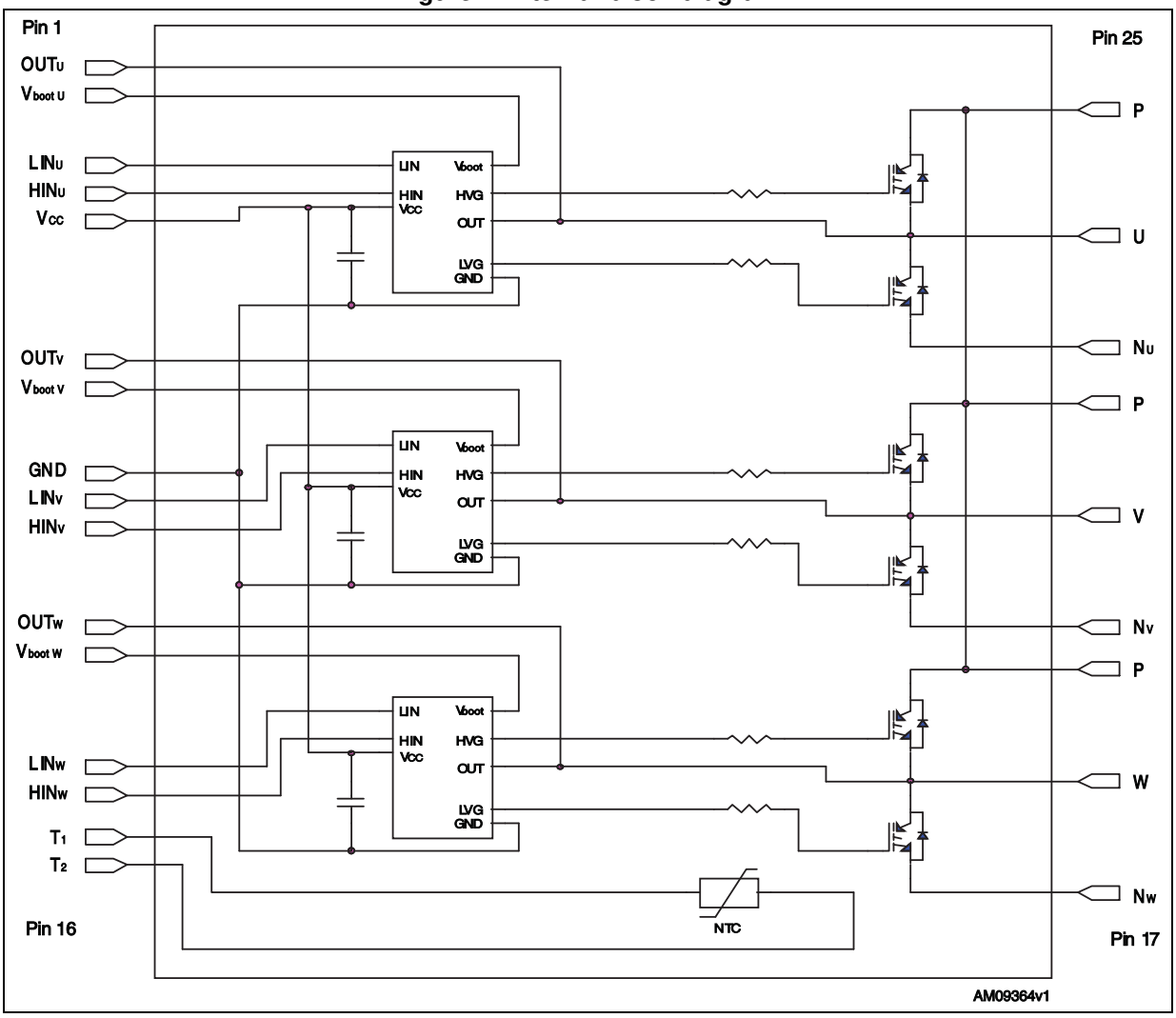

Table 2. Pin description

Pin	Symbol	Description
1	OUT_U	High side reference output for U phase
2	$V_{boot\ U}$	Bootstrap voltage for U phase
3	LIN_U	Low side logic input for U phase
4	HIN_U	High side logic input for U phase
5	V_{CC}	Low voltage power supply
6	OUT_V	High side reference output for V phase
7	$V_{boot\ V}$	Bootstrap voltage for V phase
8	GND	Ground
9	LIN_V	Low side logic input for V phase
10	HIN_V	High side logic input for V phase
11	OUT_W	High side reference output for W phase
12	$V_{boot\ W}$	Bootstrap voltage for W phase
13	LIN_W	Low side logic input for W phase
14	HIN_W	High side logic input for W phase
15	T_1	NTC thermistor terminal 1
16	T_2	NTC thermistor terminal 2
17	N_W	Negative DC input for W phase
18	W	W phase output
19	P	Positive DC input
20	N_V	Negative DC input for V phase
21	V	V phase output
22	P	Positive DC input
23	N_U	Negative DC input for U phase
24	U	U phase output
25	P	Positive DC input

Figure 2. Pin layout (bottom view)

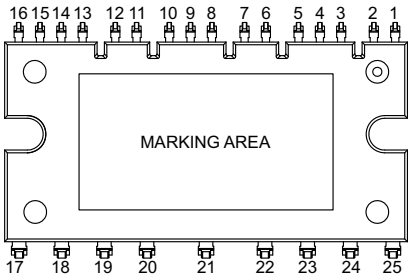

2 Electrical ratings

2.1 Absolute maximum ratings

Table 3. Inverter part

Symbol	Parameter	Value	Unit
V_{PN}	Supply voltage applied between P - N_U, N_V, N_W	450	V
$V_{PN(surge)}$	Supply voltage (surge) applied between P - N_U, N_V, N_W	500	V
V_{CES}	Each IGBT collector emitter voltage (V_{IN}(1) = 0)	600	V
$\pm I_C$(2)	Each IGBT continuous collector current at T_C = 25°C	10	A
$\pm I_{CP}$ (3)	Each IGBT pulsed collector current	20	A
P_{TOT}	Each IGBT total dissipation at T_C = 25°C	33	W
t_{scw}	Short-circuit withstand time, V_{CE} = 0.5 $V_{(BR)CES}$ T_j = 125 °C, V_{CC} = V_{boot}= 15 V, $V_{IN\ (1)}$= 5 V	5	µs

1. Applied between HIN_i, LIN_i and G_{ND} for i = U, V, W.
2. Calculated according to the iterative formula:

$$I_C(T_C) = \frac{T_{j(max)} - T_C}{R_{thj-c} \times V_{CE(sat)(max)}(T_{j(max)}, I_C(T_C))}$$

3. Pulse width limited by max junction temperature.

Table 4. Control part

Symbol	Parameter	Min.	Max	Unit
V_{OUT}	Output voltage applied between OUT_U, OUT_V, OUT_W - GND	V_{boot} -18	V_{boot} + 0.3	V
V_{CC}	Low voltage power supply	- 0.3	18	V
V_{boot}	Bootstrap voltage	- 0.3	618	V
V_{IN}	Logic input voltage applied between HIN_i, LIN_i and G_{ND} for i = U, V, W	- 0.3	V_{CC} + 0.3	V
dV_{OUT}/dt	Allowed output slew rate	50	50	V/ns

Table 5. Total system

Symbol	Parameter	Value	Unit
V_{ISO}	Isolation withstand voltage applied between each pin and heatsink plate (AC voltage, t = 60 sec.)	2500	V
T_J	Power chips operating junction temperature	-40 to 150	°C
T_C	Module case operating temperature	-40 to 125	°C

2.2 Thermal data

Table 6. Thermal data

Symbol	Parameter	Value	Unit
R_{thJC}	Thermal resistance junction-case single IGBT max.	3.8	°C/W
	Thermal resistance junction-case single diode max.	5.5	°C/W

3 Electrical characteristics

T_j = 25°C unless otherwise specified.

Table 7. Inverter part

Symbol	Parameter	Test conditions	Value			Unit
			Min.	Typ.	Max.	
$V_{CE(sat)}$	Collector-emitter saturation voltage	$V_{CC} = V_{boot}$ = 15 V, $V_{IN}^{(1)}$ = 5 V, I_C = 5 A	-	2.1	2.5	V
		$V_{CC} = V_{boot}$ = 15 V, $V_{IN}^{(1)}$ = 5 V, I_C = 5 A, T_j = 125 °C	-	1.8		
I_{CES}	Collector-cut off current ($V_{IN}^{(1)}$ = 0 “logic state”)	V_{CE} = 550 V $V_{CC} = V_{boot}$ = 15 V	-		150	µA
V_F	Diode forward voltage	$V_{IN}^{(1)}$ = 0 “logic state”, I_C = 5 A	-		1.9	V
Inductive load switching time and energy						
t_{on}	Turn-on time	V_{DD} = 300 V, $V_{CC} = V_{boot}$ = 15 V, $V_{IN}^{(1)}$= 0 ÷ 5 V, I_C = 5 A (see *Figure 4*)	-	320	-	ns
$t_{c(on)}$	Crossover time (on)		-	70	-	
t_{off}	Turn-off time		-	430	-	
$t_{c(off)}$	Crossover time (off)		-	135	-	
t_{rr}	Reverse recovery time		-	130	-	
E_{on}	Turn-on switching losses		-	65	-	µJ
E_{off}	Turn-off switching losses		-	75	-	

1. Applied between HIN_i, LIN_i and G_{ND} for i = U, V, W.

Note: *t_{ON} and t_{OFF} include the propagation delay time of the internal drive. $t_{C(ON)}$ and $t_{C(OFF)}$ are the switching time of IGBT itself under the internally given gate driving condition.*

Figure 3. Switching time test circuit

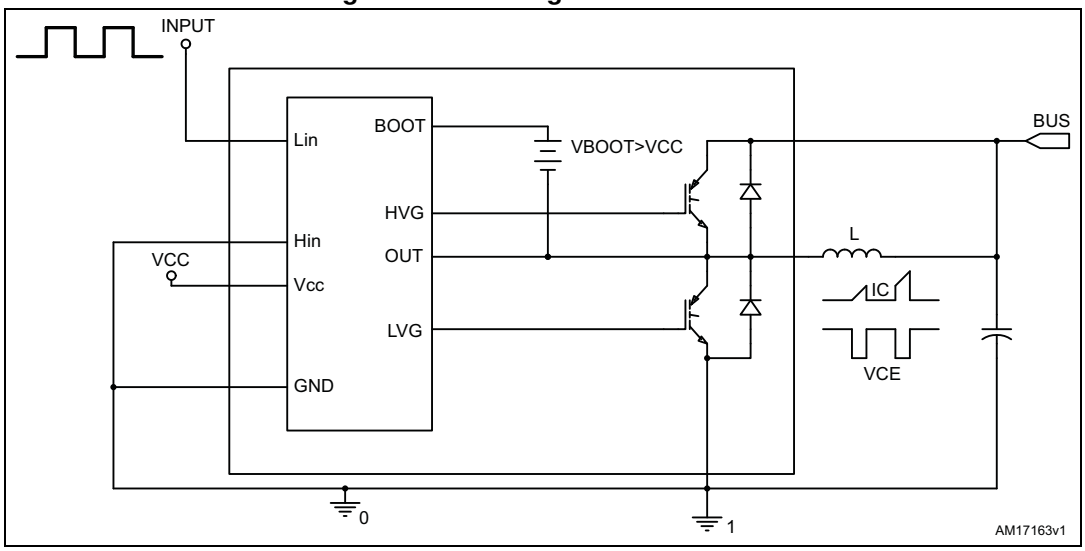

Figure 4. Switching time definition

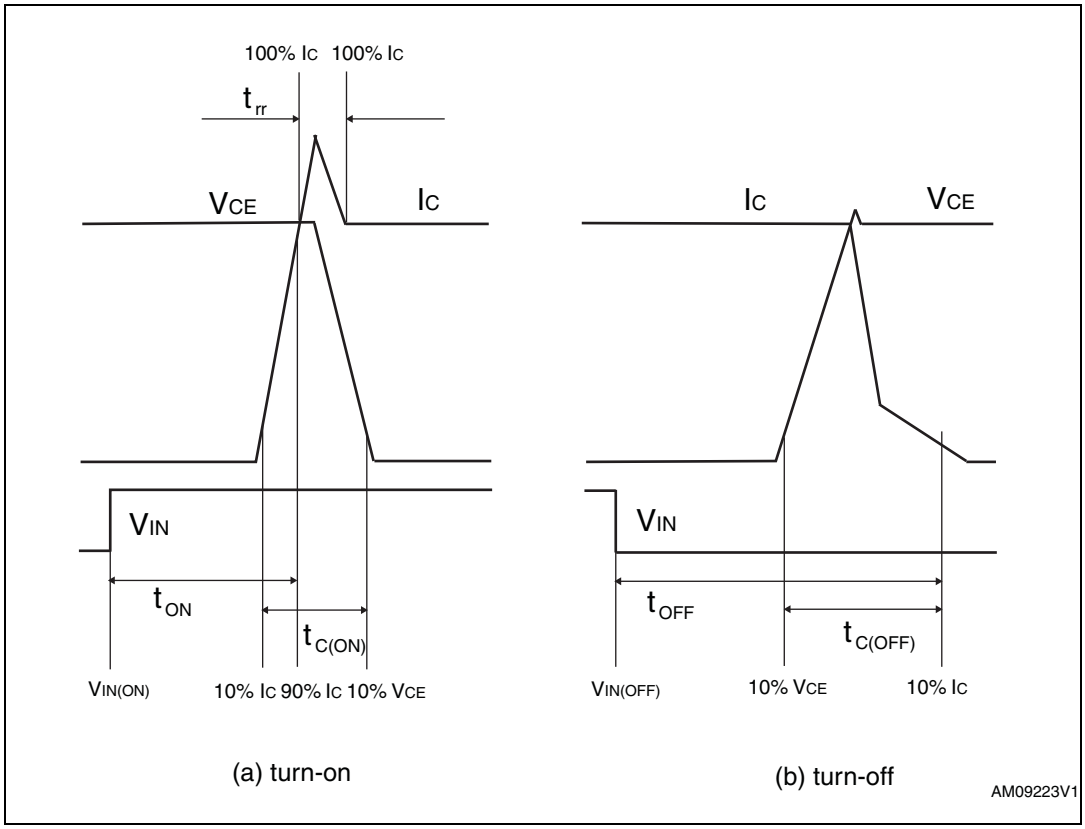

3.1 Control part

Table 8. Low supply voltage (V_{CC} = 15 V unless otherwise specified)

Symbol	Parameter	Test conditions	Min.	Typ.	Max.	Unit
V_{CCthON}	Under voltage turn on threshold		9.1	9.6	10.1	V
$V_{CCthOFF}$	Under voltage turn off threshold		7.9	8.3	8.8	V
V_{CChys}	Under voltage hystereses		0.9			V
I_{qccu}	Under voltage quiescent supply current	V_{CC} < 7.9 V		0.75	1.2	mA
I_{qcc}	Quiescent current	V_{CC} = 15 V		1	1.5	mA

Table 9. Bootstrap supply (V_{CC} = 15 V unless otherwise specified)

Symbol	Parameter	Test conditions	Min.	Typ.	Max.	Unit
V_{boot_thON}	Under voltage turn on threshold		8.5	9.5	10.5	V
V_{boot_thOFF}	Under voltage turn off threshold		7.2	8.3	9.2	V
$V_{boothys}$	Under voltage hystereses		0.9			V
I_{qboot}	Quiescent current				250	µA
$R_{DS(on)}$	Bootstrap driver on resistance	V_{CC} > 12.5 V		125		Ω

Table 10. Logic input (1) (V_{CC} = 15 V unless otherwise specified)

Symbol	Parameter	Test conditions	Min.	Typ.	Max.	Unit
V_{il}	Low level logic input voltage				1.1	V
V_{ih}	High level logic input voltage		1.8			V
I_{il}	Low level logic input current	V_{IN}(2) = 0	-1			µA
I_{ih}	High level logic input current	V_{IN}(1) = 15 V		20	70	µA

1. See *Figure 9: Dead time and interlocking definition*.
2. Applied between HIN_i, LIN_i and G_{ND} for i = U, V, W

3.1.1 NTC thermistor

Table 11. NTC thermistor

Symbol	Parameter	Test conditions	Min.	Typ.	Max.	Unit.
R_{25}	Resistance	T = 25°C		4.7		kΩ
R_{125}	Resistance	T = 125°C		160		Ω
B	B-constant	T = 25°C to 85°C		3950		K
T	Operating temperature		-40		150	°C

Equation 1: resistance variation vs. temperature

$$R(T) = R_{25} \cdot e^{B\left(\frac{1}{T} - \frac{1}{298}\right)}$$

Where T are temperatures in Kelvin.

Figure 5. NTC resistance vs. temperature

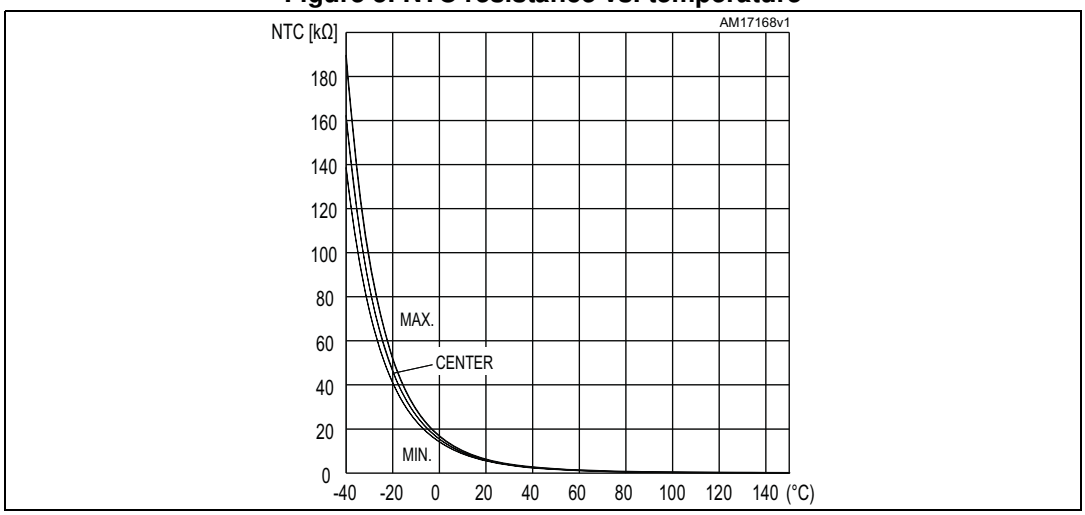

Figure 6. NTC resistance vs. temperature (zoom)

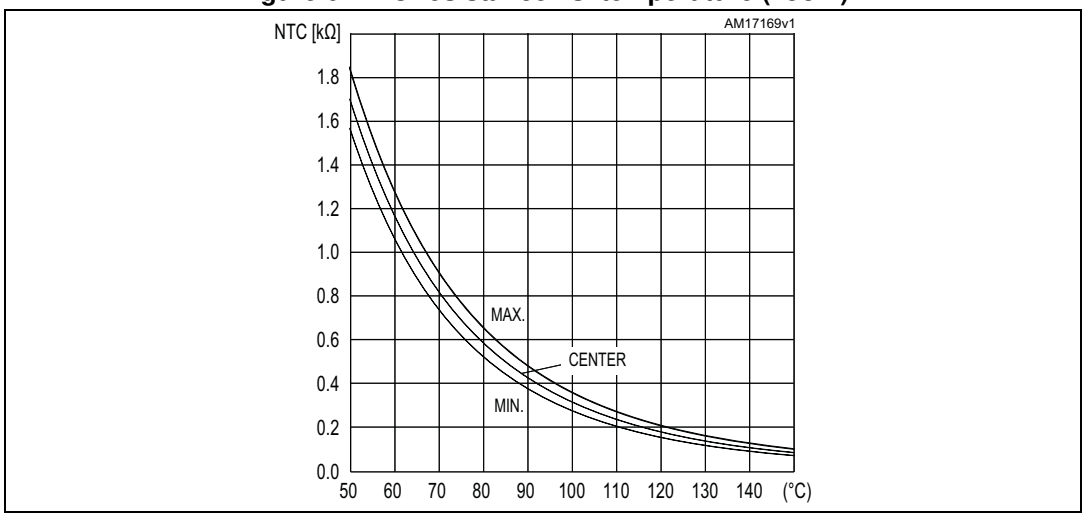

Figure 7. Maximum $I_{C(RMS)}$ current vs. switching frequency (1)

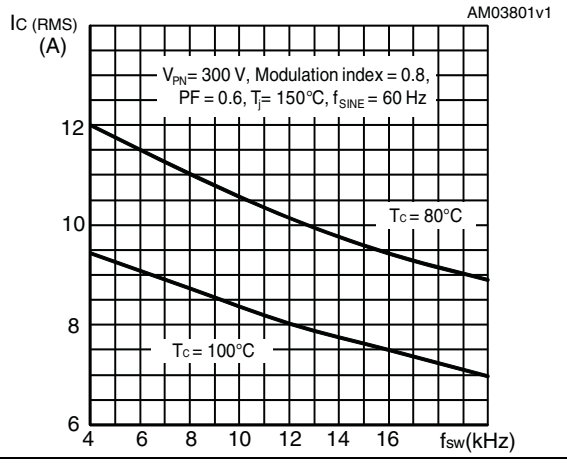

Figure 8. Maximum $I_{C(RMS)}$ current vs. f_{SINE} (1)

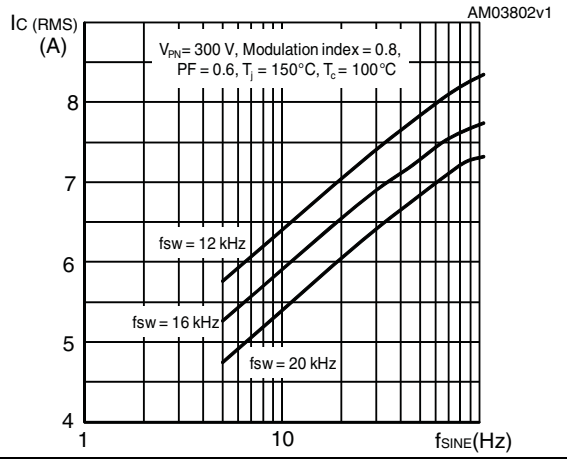

1. Simulated curves refer to typical IGBT parameters and maximum R_{thj-c}.

Figure 9. Dead time and interlocking definition

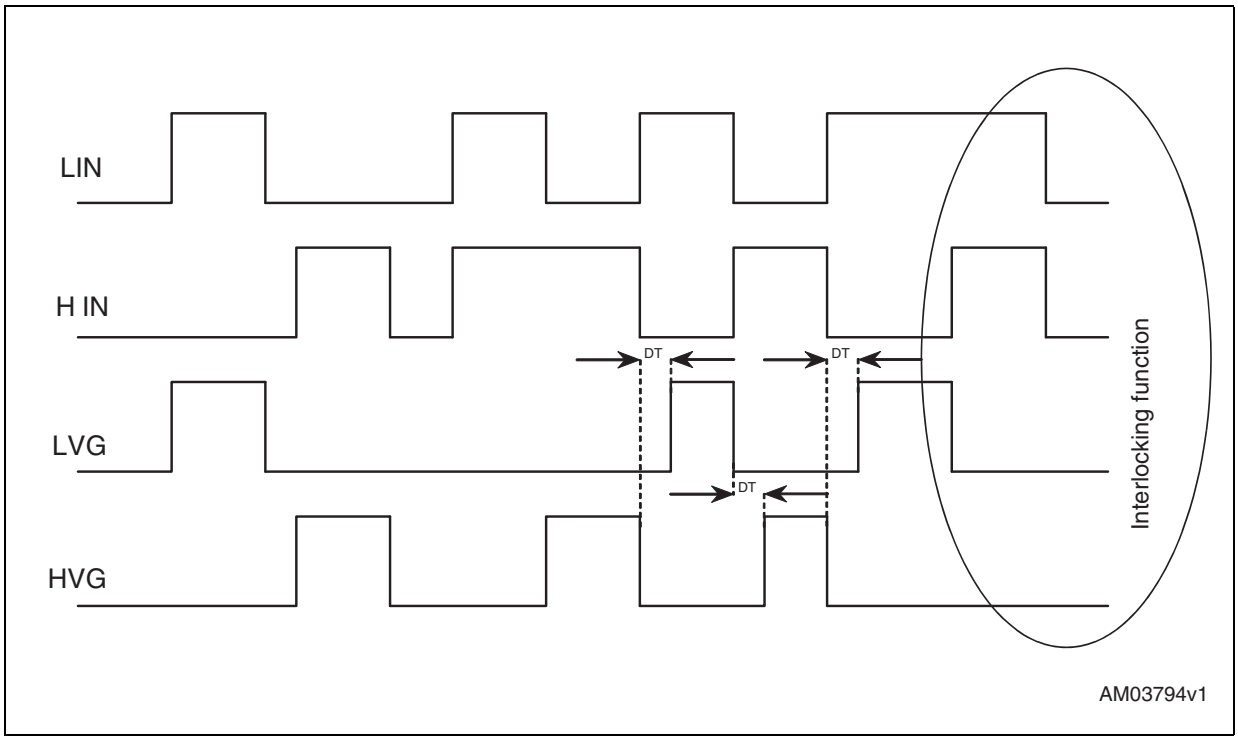

Minimum recommended dead time (DT) between low and high side logic input: 1 µs.

4 Application information

Figure 10. Typical application circuit

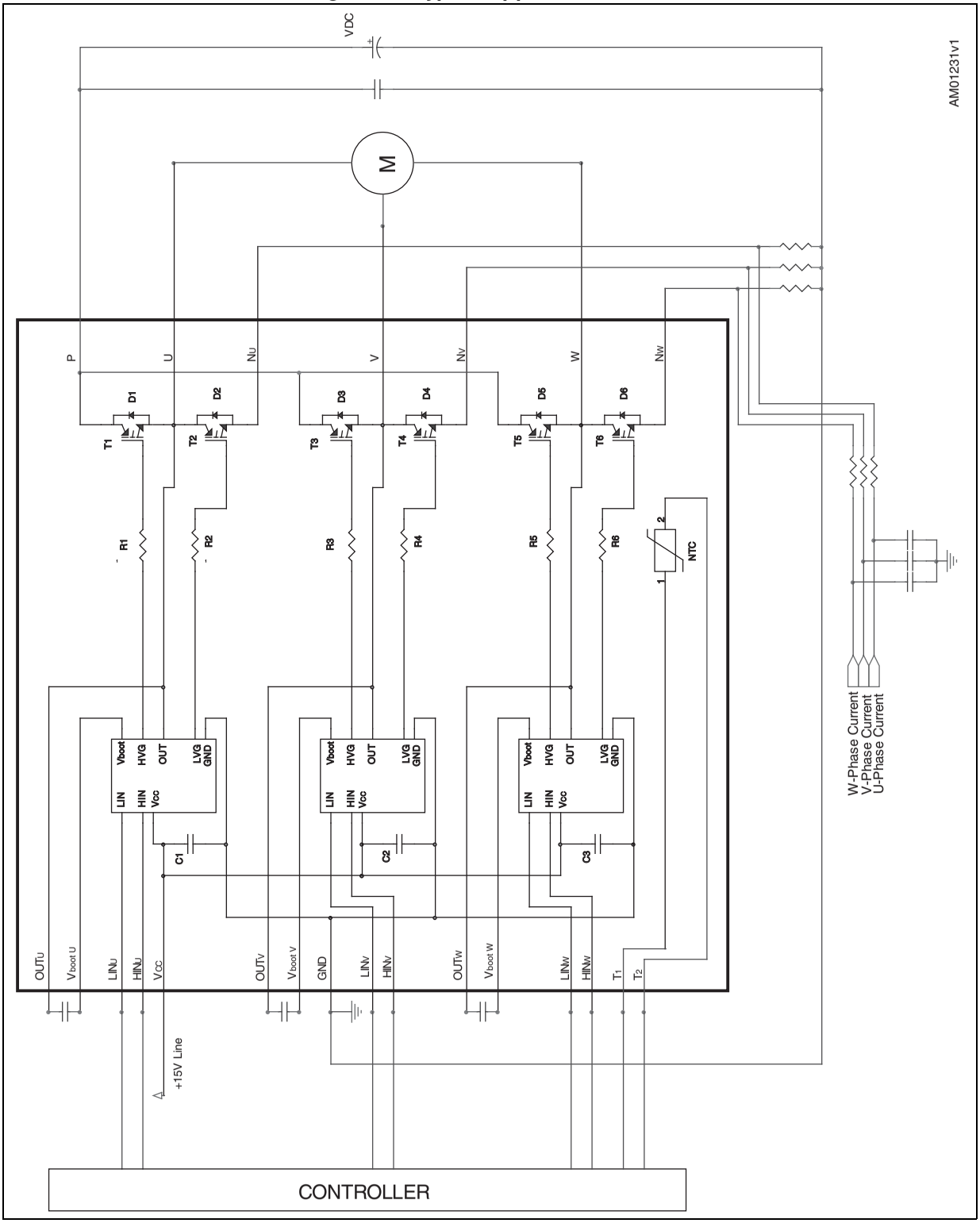

4.1 Recommendations

- Input signal HIN,LIN are active-high logic. A 500 kΩ (typ.) pull down resistor is built-in for each high side input. If an external RC filter is used, for noise immunity, pay attention to the variation of the input signal level.
- To prevent the input signals oscillation, the wiring of each input should be as short as possible.
- By integrating an application specific type HVIC inside the module, direct coupling to MCU terminals without any opto-coupler is possible.
- Each capacitor should be located as nearby the pins of IPM as possible.
- Low inductance shunt resistors should be used for phase leg current sensing.
- Electrolytic bus capacitors should be mounted as close to the module bus terminals as possible. Additional high frequency ceramic capacitor mounted close to the module pins will further improve performance.

Table 12. Recommended operating conditions

Symbol	Parameter	Conditions	Min.	Typ.	Max.	Unit
V_{PN}	Supply Voltage	Applied between P-Nu, Nv, Nw		300	400	V
V_{CC}	Control supply voltage	Applied between V_{CC}-GND	12	15	17	V
V_{BS}	High side bias voltage	Applied between V_{BOOTi}-OUT_i for i = U, V, W	11.5		17	V
t_{dead}	Blanking time to prevent Arm-short	For each input signal	1			µs
f_{PWM}	PWM input signal	-40°C < T_c < 100°C -40°C < T_j < 125°C			20	kHz
T_C	Case operation temperature				100	°C

For further details, refer to AN3338.

5 Package information

In order to meet environmental requirements, ST offers these devices in different grades of ECOPACK® packages, depending on their level of environmental compliance. ECOPACK® specifications, grade definitions and product status are available at: www.st.com. ECOPACK is an ST trademark.

Please refer to dedicated technical note TN0107 for mounting instructions.

5.1 SDIP-25L package information

Figure 11. SDIP-25L package outline

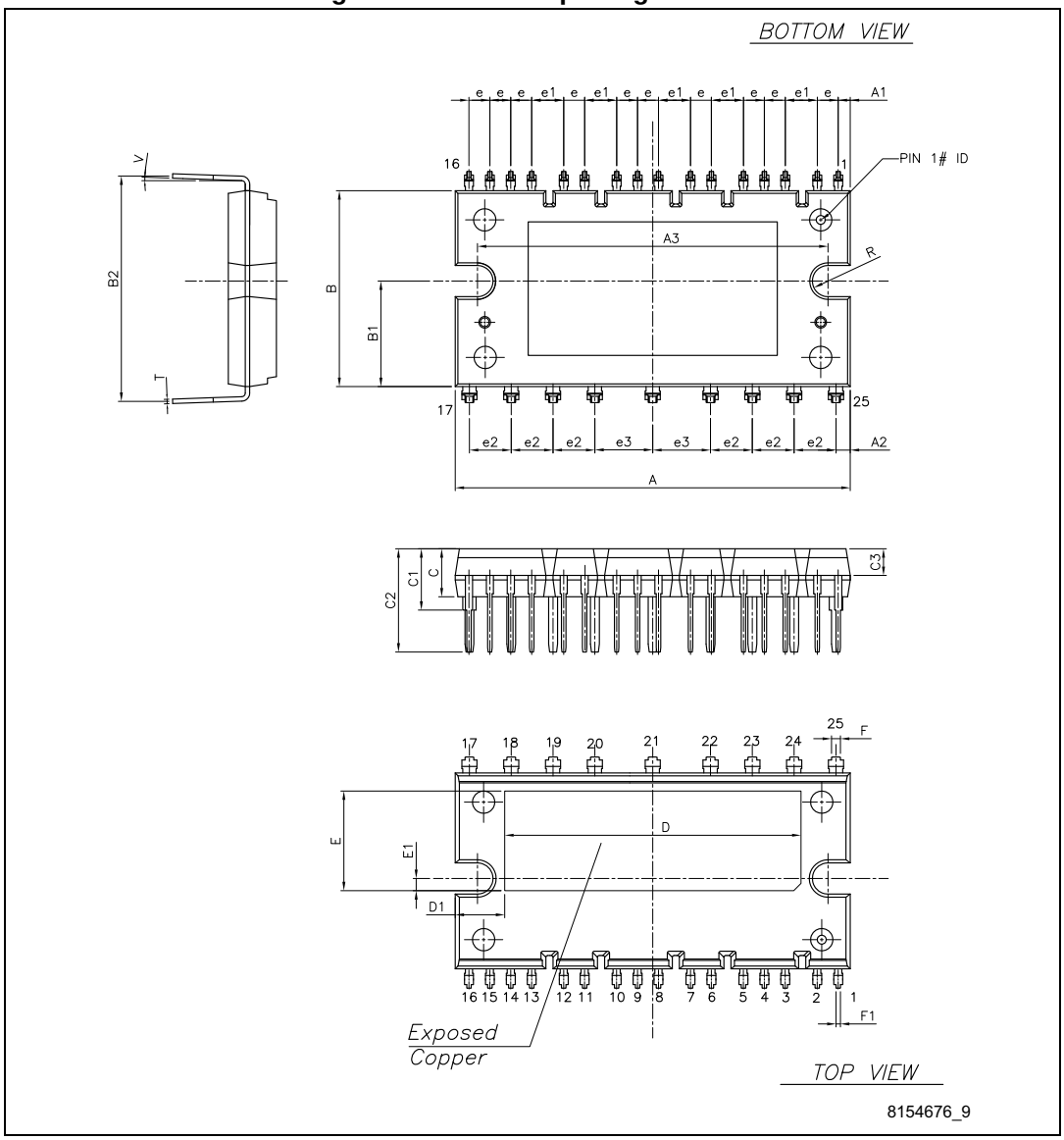

Table 13. SDIP-25L mechanical data

Dim.	mm		
	Min.	Typ.	Max.
A	43.90	44.40	44.90
A1	1.15	1.35	1.55
A2	1.40	1.60	1.80
A3	38.90	39.40	39.90
B	21.50	22.00	22.50
B1	11.25	11.85	12.45
B2	24.83	25.23	25.63
C	5.00	5.40	6.00
C1	6.50	7.00	7.50
C2	11.20	11.70	12.20
C3	2.90	3.00	3.10
e	2.15	2.35	2.55
e1	3.40	3.60	3.80
e2	4.50	4.70	4.90
e3	6.30	6.50	6.70
D		33.30	
D1		5.55	
E		11.20	
E1		1.40	
F	0.85	1.00	1.15
F1	0.35	0.50	0.65
R	1.55	1.75	1.95
T	0.45	0.55	0.65
V	0°		6°

5.2 Packing information

Figure 12. SDIP-25L packing information

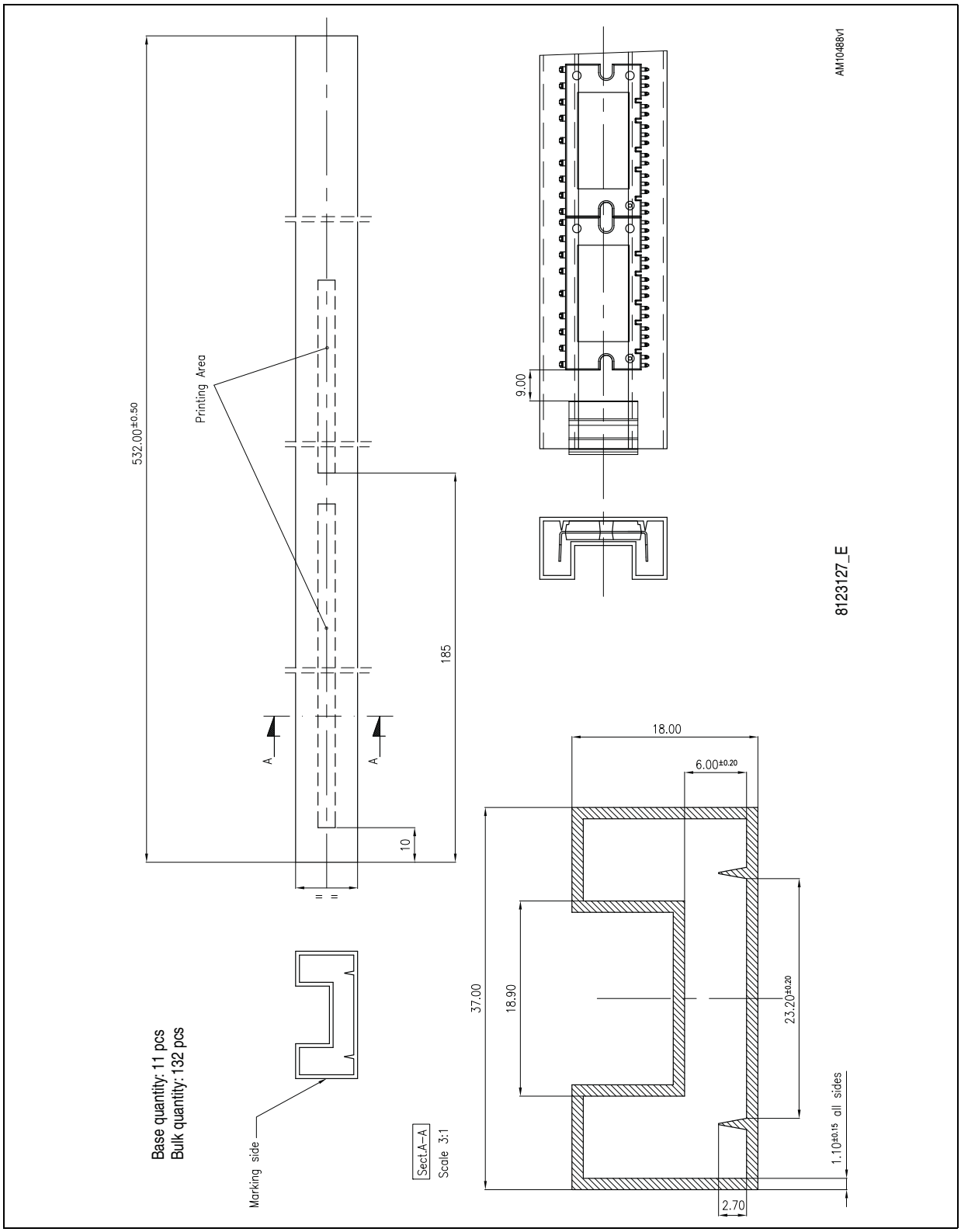

6 Revision history

Table 14. Document revision history

Date	Revision	Changes
09-Dec-2013	1	Initial release.
18-Feb-2014	2	– Document status promoted from target specification to preliminary data – Minor text changes
14-Apr-2015	3	Text edits and formatting changes throughout document Updated *Figure 2: Pin layout (bottom view)* Updated *Section 5: Package information*