Chipsmall Limited consists of a professional team with an average of over 10 year of expertise in the distribution of electronic components. Based in Hongkong, we have already established firm and mutual-benefit business relationships with customers from,Europe,America and south Asia,supplying obsolete and hard-to-find components to meet their specific needs.

With the principle of “Quality Parts,Customers Priority,Honest Operation,and Considerate Service”,our business mainly focus on the distribution of electronic components. Line cards we deal with include Microchip,ALPS,ROHM,Xilinx,Pulse,ON,Everlight and Freescale. Main products comprise IC,Modules,Potentiometer,IC Socket,Relay,Connector.Our parts cover such applications as commercial,industrial, and automotives areas.

We are looking forward to setting up business relationship with you and hope to provide you with the best service and solution. Let us make a better world for our industry!

Contact us

Tel: +86-755-8981 8866 Fax: +86-755-8427 6832
Email & Skype: info@chipsmall.com Web: www.chipsmall.com
Address: A1208, Overseas Decoration Building, #122 Zhenhua RD., Futian, Shenzhen, China

STPS40SM120C

Power Schottky rectifier

Datasheet - production data

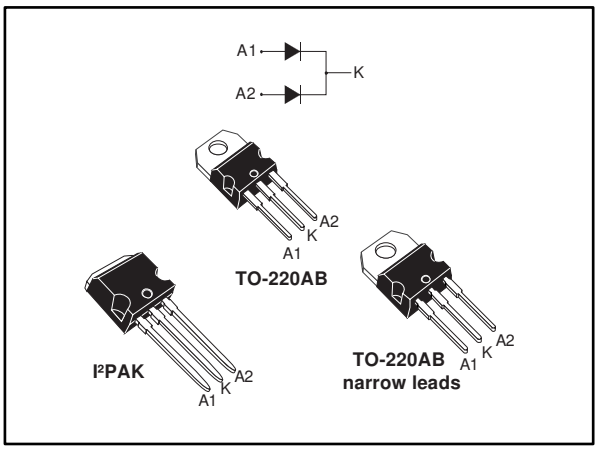

Features

- High current capability
- Avalanche rated
- Low forward voltage drop current
- High frequency operation
- ECOPACK®2 compliant component on TO-220AB

Description

This Schottky rectifier is suited for high frequency switch mode power supply.

The voltage drop versus leakage current trade-off is in keeping with medium power hi-density adapter design.

Packaged in TO-220AB narrow leads, TO-220AB and I²PAK, this device is intended to be used in notebook, game station and desktop adaptors, providing in these applications a good efficiency at both low and high load.

Table 1: Device summary

Symbol	Value
$I_{F(AV)}$	2 x 20 A
V_{RRM}	120 V
T_j(max.)	150 °C
V_F(typ.)	0.46 V

Figure 1: Electrical characteristics

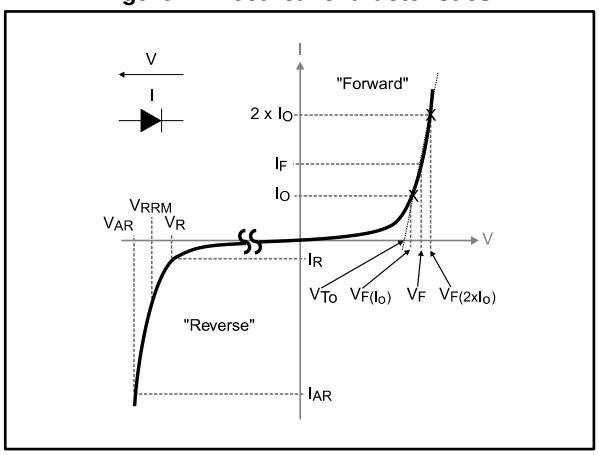

V_{ARM} and I_{ARM} must respect the reverse safe operating area defined in Figure 9. V_{AR} and I_{AR} are pulse measurements (t_p < 1 µs). V_R, I_R, V_{RRM} and V_F, are static characteristics.

1 Characteristics

Table 2: Absolute ratings (per diode, limiting values at 25 °C, unless otherwise specified)

Symbol	Parameter		Value	Unit
V_{RRM}	Repetitive peak reverse voltage		120	V
$I_{F(RMS)}$	Forward rms current		30	A
$I_{F(AV)}$	Average forward current δ = 0.5, square wave	Per diode, T_C = 125 °C	20	A
		Per device, T_C = 115 °C	40	
I_{FSM}	Surge non repetitive forward current	t_p = 10 ms sine-wave	210	A
P_{ARM}(1)	Repetitive peak avalanche power	t_p = 10 µs, T_j = 125 °C	1150	W
V_{ARM}(2)	Maximum repetitive peak avalanche voltage	t_p < 10 µs, T_j < 125 °C, I_{AR} < 7.7 A	150	V
V_{ASM}	Maximum single pulse peak avalanche voltage			
T_{stg}	Storage temperature range		-65 to +175	°C
T_j	Maximum operating junction temperature (3)		150	°C

Notes:

(1)For pulse time duration deratings, please refer to figure 4. More details regarding the avalanche energy measurements and diode validation in the avalanche are provided in the application notes AN1768 and AN2025.

(2)See Figure 9

(3)$(dP_{tot}/dT_j) < (1/R_{th(j-a)})$ condition to avoid thermal runaway for a diode on its own heatsink.

Table 3: Thermal parameters

Symbol	Parameter		Max. value	Unit
$R_{th(j-c)}$	Junction to case	Per diode	1.35	°C/W
		Total	0.93	
$R_{th(c)}$	Coupling		0.50	

When the two diodes 1 and 2 are used simultaneously:

ΔT_j(diode 1) = P(diode 1) x $R_{th(j-c)}$(Per diode) + P(diode 2) x $R_{th(c)}$

Table 4: Static electrical characteristics (values per diode)

Symbol	Parameter	Test conditions		Min.	Typ.	Max.	Unit
I_R (1)	Reverse leakage current	T_j = 25 °C	$V_R = V_{RRM}$	-	55	275	µA
		T_j = 125 °C		-	20	50	mA
V_F (2)	Forward voltage drop	T_j = 125 °C	I_F = 5 A	-	0.46	0.51	V
		T_j = 125 °C	I_F = 10 A	-	0.55	0.60	
		T_j = 25 °C	I_F = 20 A	-		0.83	
		T_j = 125 °C		-	0.63	0.69	

Notes:

(1)Pulse test: t_p = 5 ms, δ < 2%

(2)Pulse test: t_p = 380 µs, δ < 2%

To evaluate the conduction losses, use the following equation:

$P = 0.52 \times I_{F(AV)} + 0.0085 \times I_{F}^{2}{}_{(RMS)}$

1.1 Characteristics (curves)

Figure 2: Average forward power dissipation versus average forward current (per diode)

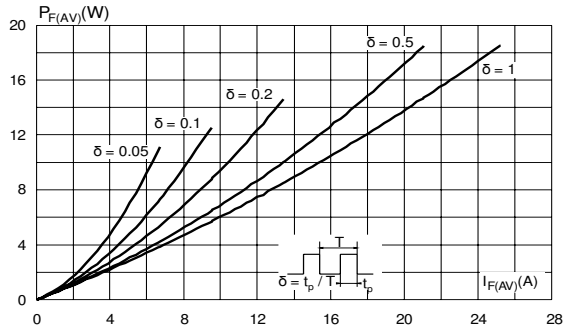

Figure 3: Average forward current versus ambient temperature (δ = 0.5, per diode)

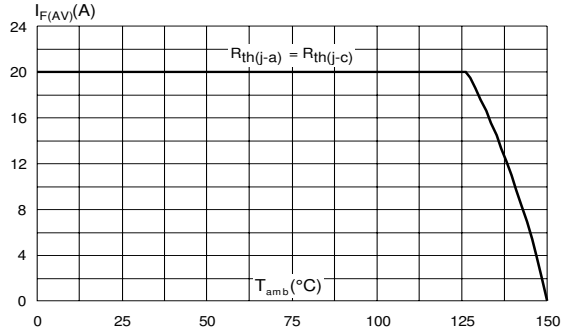

Figure 4: Normalized avalanche power derating versus pulse duration (per diode)

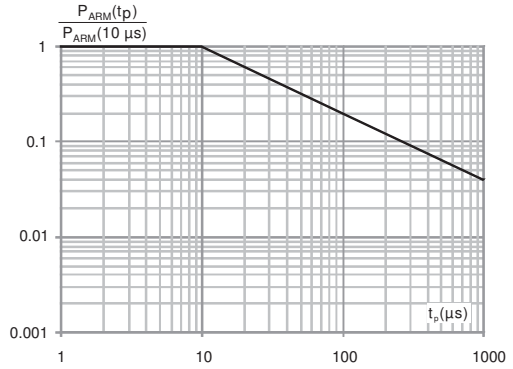

Figure 5: Relative variation of thermal impedance junction to case versus pulse duration (per diode)

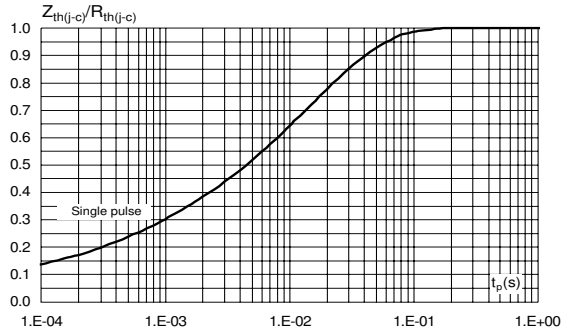

Figure 6: Reverse leakage current versus reverse voltage applied (typical values, per diode)

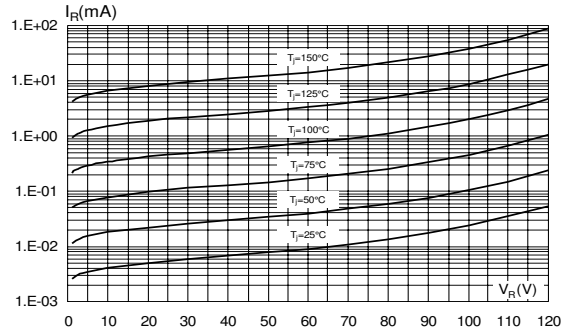

Figure 7: Junction capacitance versus reverse voltage applied (typical values, per diode)

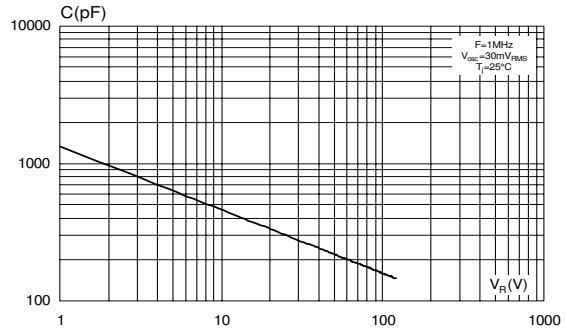

Figure 8: Forward voltage drop versus forward current (per diode)

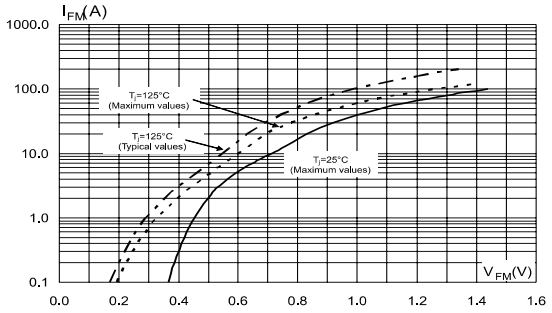

Figure 9: Reverse safe operating area (t_p < 1 µs and T_j < 150 °C, per diode)

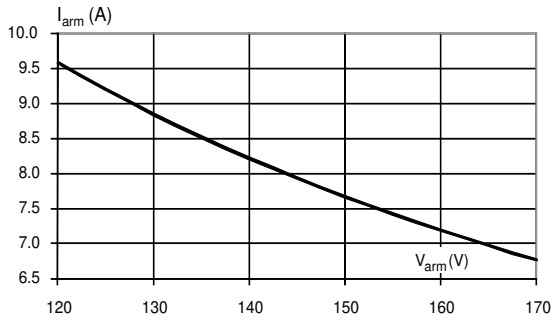

2 Package information

In order to meet environmental requirements, ST offers these devices in different grades of ECOPACK® packages, depending on their level of environmental compliance. ECOPACK® specifications, grade definitions and product status are available at: ***www.st.com***. ECOPACK® is an ST trademark.

- Cooling method: by conduction (C)
- Epoxy meets UL 94,V0
- Recommended torque value: 0.55 N·m (for TO-220AB)
- Maximum torque value: 0.7 N·m (for TO-220AB)

2.1 TO-220AB narrow leads package information

Figure 10: TO-220AB narrow leads package outline

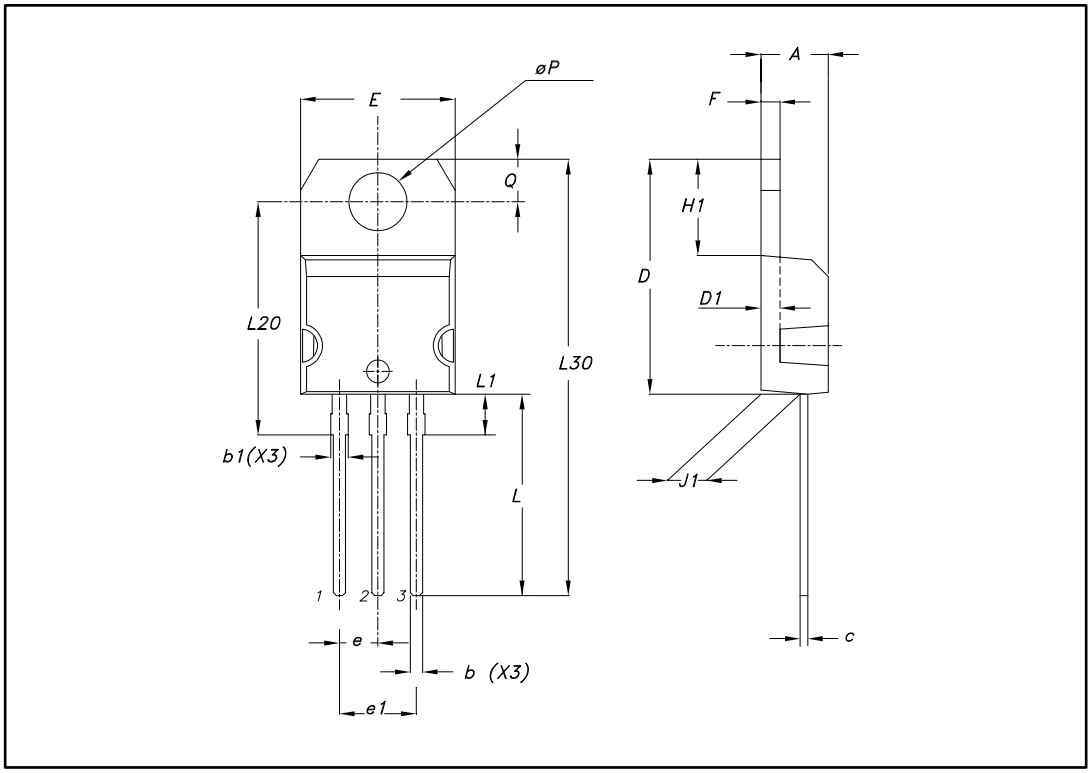

Table 5: TO-220AB narrow leads package mechanical data

Ref.	Dimensions			
	Millimeters		Inches	
	Min.	Max.	Min.	Max.
A	4.40	4.60	0.17	0.18
b	0.61	0.88	0.024	0.034
b1	0.95	1.20	0.037	0.047
c	0.48	0.70	0.019	0.027
D	15.25	15.75	0.060	0.062
D1	1.27 typ.		0.05 typ.	
E	10.00	10.40	0.39	0.41
e	2.40	2.70	0.094	0.106
e1	4.95	5.15	0.19	0.20
F	1.23	1.32	0.048	0.052
H1	6.20	6.60	0.24	0.26
J1	2.40	2.72	0.095	0.107
L	13.00	14.00	0.51	0.55
L1	2.60	2.90	0.102	0.114
L20	15.40 typ.		0.61	
L30	28.90 typ.		1.14	
ØP	3.75	3.85	0.147	0.151
Q	2.65	2.95	0.104	0.116

2.2 TO-220AB package information

Figure 11: TO-220AB package outline

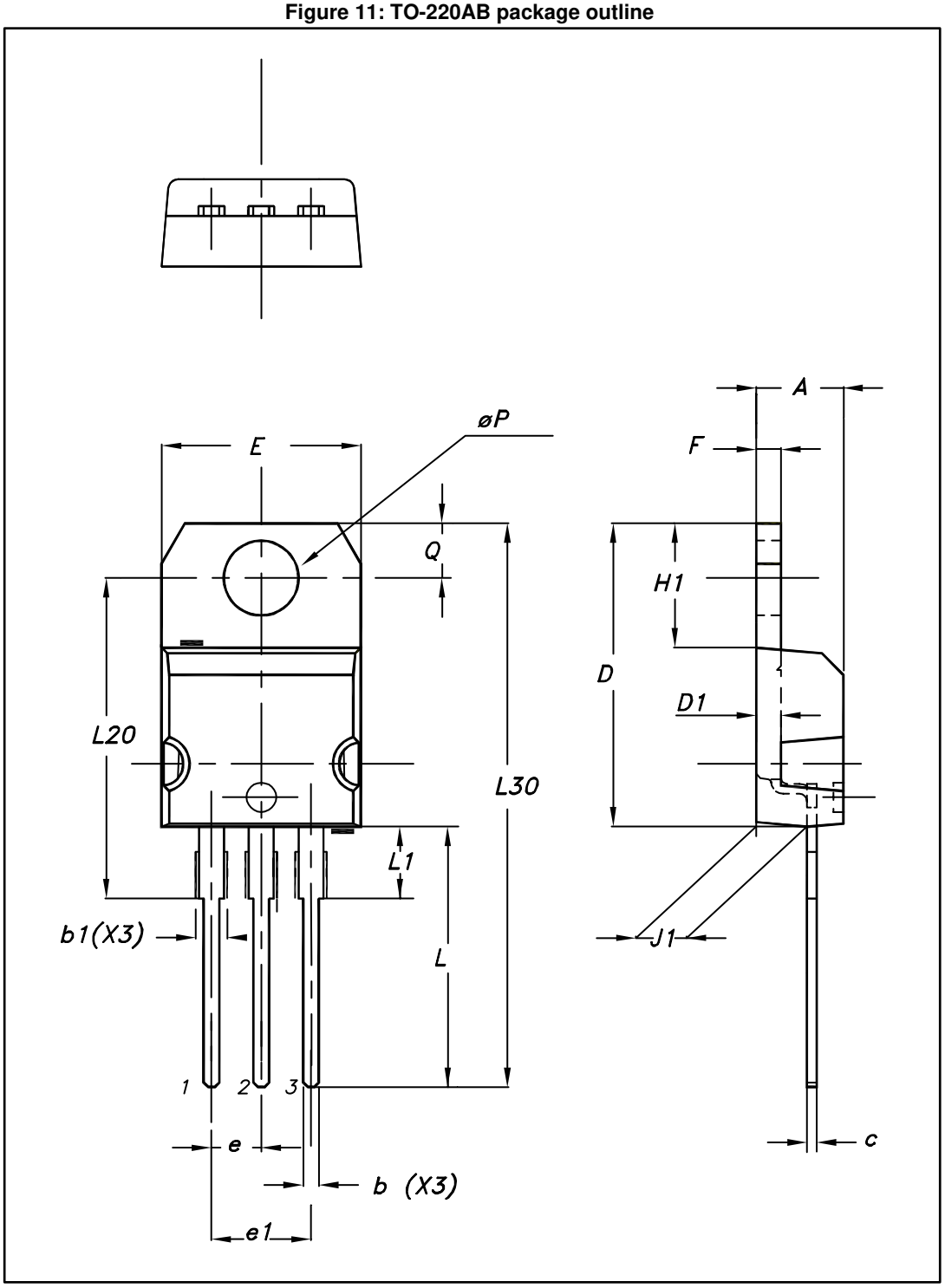

Table 6: TO-220AB package mechanical data

Ref.	Dimensions			
	Millimeters		Inches[1]	
	Min.	Max.	Min.	Max.
A	4.40	4.60	0.1732	0.1811
b	0.61	0.88	0.0240	0.0346
b1	1.14	1.70	0.0449	0.0669
c	0.48	0.70	0.0189	0.0276
D	15.25	15.75	0.6004	0.6201
D1	1.27 typ.		0.0500 typ.	
E	10.00	10.40	0.3937	0.4094
e	2.40	2.70	0.0945	0.1063
e1	4.95	5.15	0.1949	0.2028
F	1.23	1.32	0.0484	0.0520
H1	6.20	6.60	0.2441	0.2598
J1	2.40	2.72	0.0945	0.1071
L	13.00	14.00	0.5118	0.5512
L1	3.50	3.93	0.1378	0.1547
L20	16.40 typ.		0.6457 typ.	
L30	28.90 typ.		1.1378 typ.	
ØP	3.75	3.85	0.1476	0.1516
Q	2.65	2.95	0.1043	0.1161

Notes:

(1)Inch dimensions are for reference only.

2.3 I²PAK package information

Figure 12: I²PAK package outline

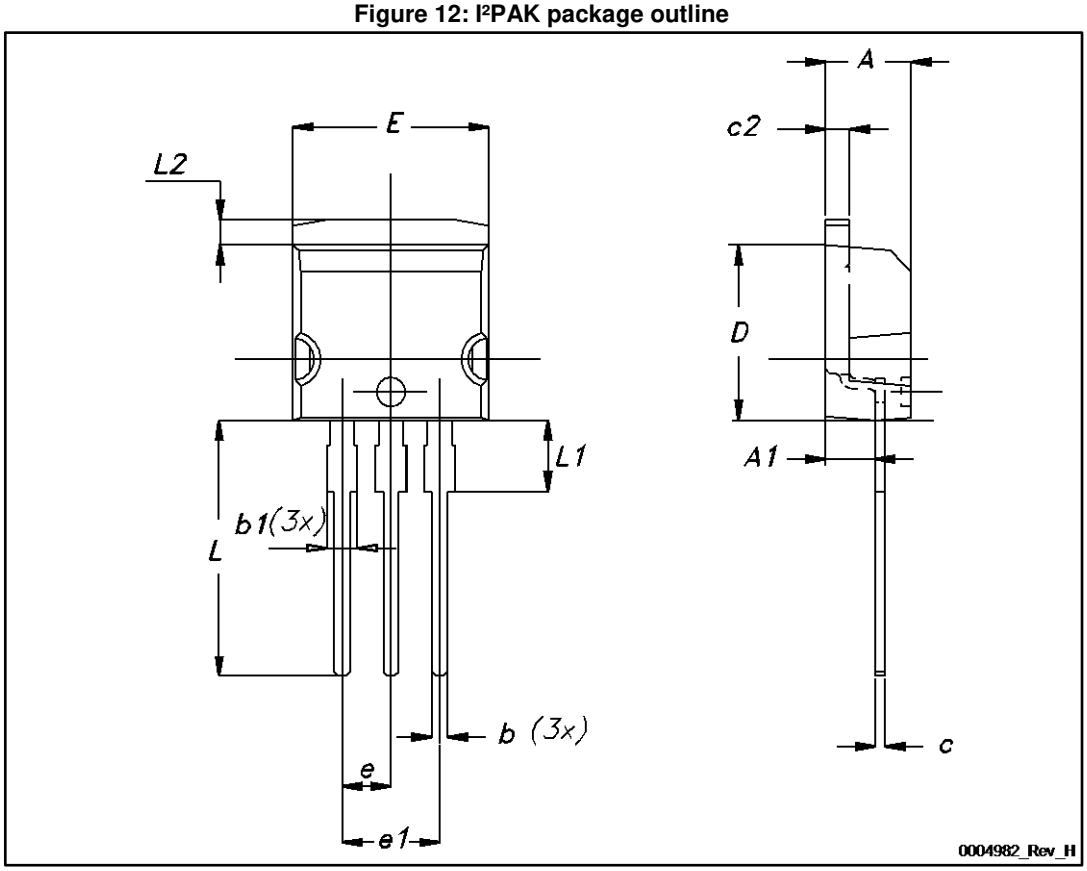

Table 7: I²PAK package mechanical data

Ref.	Dimensions			
	Millimeters		Inches	
	Min.	Max.	Min.	Max.
A	4.40	4.60	0.173	0.181
A1	2.40	2.72	0.094	0.107
b	0.61	0.88	0.024	0.035
b1	1.14	1.70	0.044	0.067
c	0.49	0.70	0.019	0.028
c2	1.23	1.32	0.048	0.052
D	8.95	9.35	0.352	0.368
e	2.40	2.70	0.094	0.106
e1	4.95	5.15	0.195	0.203
E	10.00	10.40	0.394	0.409
L	13.00	14.00	0.512	0.551
L1	3.50	3.93	0.138	0.155
L2	1.27	1.40	0.050	0.055

3 Ordering information

Table 8: Ordering information

Order code	Marking	Package	Weight	Base qty.	Delivery mode
STPS40SM120CR	PS40SM120CR	I²PAK	1.49 g	50	Tube
STPS40SM120CTN	PS40SM120CTN	TO-220AB narrow leads	1.9 g	50	Tube
STPS40SM120CT	PS40SM120CT	TO-220AB	2.2 g	50	Tube

4 Revision history

Table 9: Document revision history

Date	Revision	Changes
02-Apr-2012	1	First issue.
04-Nov-2014	2	Added TO-220AB and TO-220FPAB package information.
11-Apr-2017	3	Updated *Section 1: "Characteristics"* and *Section 1.1: "Characteristics (curves)"*.

IMPORTANT NOTICE – PLEASE READ CAREFULLY

STMicroelectronics NV and its subsidiaries ("ST") reserve the right to make changes, corrections, enhancements, modifications, and improvements to ST products and/or to this document at any time without notice. Purchasers should obtain the latest relevant information on ST products before placing orders. ST products are sold pursuant to ST's terms and conditions of sale in place at the time of order acknowledgement.

Purchasers are solely responsible for the choice, selection, and use of ST products and ST assumes no liability for application assistance or the design of Purchasers' products.

No license, express or implied, to any intellectual property right is granted by ST herein.

Resale of ST products with provisions different from the information set forth herein shall void any warranty granted by ST for such product.

ST and the ST logo are trademarks of ST. All other product or service names are the property of their respective owners.

Information in this document supersedes and replaces information previously supplied in any prior versions of this document.