Chipsmall Limited consists of a professional team with an average of over 10 year of expertise in the distribution of electronic components. Based in Hongkong, we have already established firm and mutual-benefit business relationships with customers from,Europe,America and south Asia,supplying obsolete and hard-to-find components to meet their specific needs.

With the principle of “Quality Parts,Customers Priority,Honest Operation,and Considerate Service”,our business mainly focus on the distribution of electronic components. Line cards we deal with include Microchip,ALPS,ROHM,Xilinx,Pulse,ON,Everlight and Freescale. Main products comprise IC,Modules,Potentiometer,IC Socket,Relay,Connector.Our parts cover such applications as commercial,industrial, and automotives areas.

We are looking forward to setting up business relationship with you and hope to provide you with the best service and solution. Let us make a better world for our industry!

Contact us

Tel: +86-755-8981 8866 Fax: +86-755-8427 6832
Email & Skype: info@chipsmall.com Web: www.chipsmall.com
Address: A1208, Overseas Decoration Building, #122 Zhenhua RD., Futian, Shenzhen, China

STPS5H100

High voltage power Schottky rectifier

Datasheet - production data

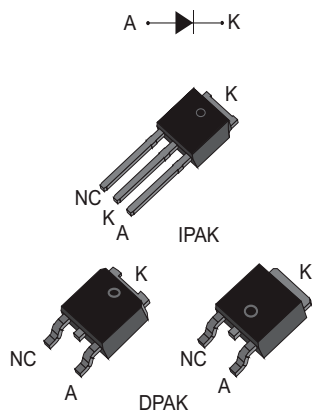

Description

This high voltage Schottky barrier rectifier is packaged in DPAK and IPAK and designed for high frequency compact switched mode power supply such as adaptators and on board DC-DC converters.

Table 1. Device summary

Symbol	Value
$I_{F(AV)}$	5 A
V_{RRM}	100 V
T_j	175 °C
V_F(max)	0.61 V

Features

- Negligible switching losses
- High junction temperature capability
- Low leakage current
- Good trade off between leakage current and forward voltage drop
- Avalanche capability specified
- ECOPACK®2 compliant component for IPAK and DPAK on demand

1 Characteristics

Table 2. Absolute ratings (limiting values)

Symbol	Parameter		Value	Unit
V_{RRM}	Repetitive peak reverse voltage		100	V
$I_{F(RMS)}$	RMS forward voltage		10	A
$I_{F(AV)}$	Average forward current, $\delta = 0.5$	$T_C = 165$ °C	5	A
I_{FSM}	Surge non repetitive forward current	$t_p = 10$ ms sinusoidal	75	A
P_{ARM}	Repetitive peak avalanche power	$t_p = 10$ µs, $T_j = 125$ °C	515	W
T_{stg}	Storage temperature range		-65 to + 175	°C
T_j	Maximum operating junction temperature(1)		175	°C

1. $\frac{dPtot}{dTj} < \frac{1}{Rth(j-a)}$ condition to avoid thermal runaway for a diode on its own heatsink

Table 3. Thermal resistance

Symbol	Parameter	Value	Unit
$R_{th(j-c)}$	Junction to case	2.5	°C/W

Table 4. Static electrical characteristics

Symbol	Parameter	Tests conditions		Min.	Typ	Max.	Unit
I_R (1)	Reverse leakage current	$T_j = 25$ °C	$V_R = V_{RRM}$			3.5	µA
		$T_j = 125$ °C			1.3	4.5	mA
V_F (2)	Forward voltage drop	$T_j = 25$ °C	$I_F = 5$ A			0.73	V
		$T_j = 125$ °C			0.57	0.61	
		$T_j = 25$ °C	$I_F = 10$ A			0.85	
		$T_j = 125$ °C			0.66	0.71	

1. $t_p = 5$ ms, $\delta < 2\%$
2. $t_p = 380$ µs, $\delta < 2\%$

To evaluate the conduction losses use the following equation:

$P = 0.51 \times I_{F(AV)} + 0.02\ I_{F^2(RMS)}$

Figure 1. Average forward power dissipation versus average forward current

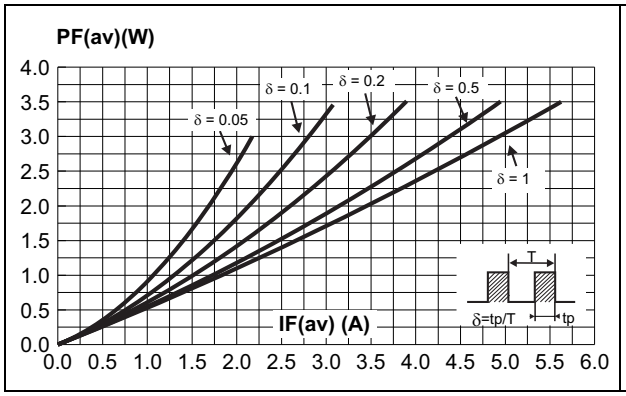

Figure 2. Average forward current versus ambient temperature, δ = 0.5

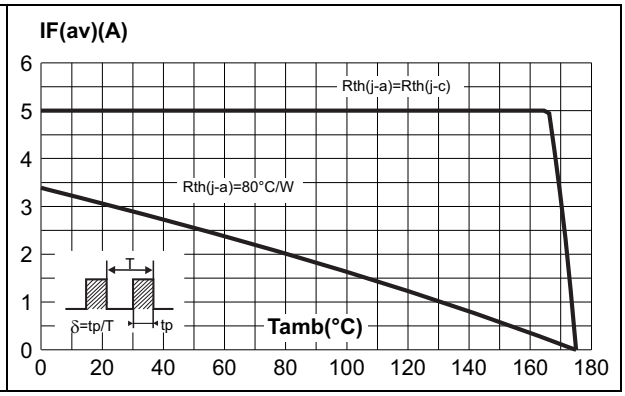

Figure 3. Normalized avalanche power derating versus pulse duration at T_j = 125 °C

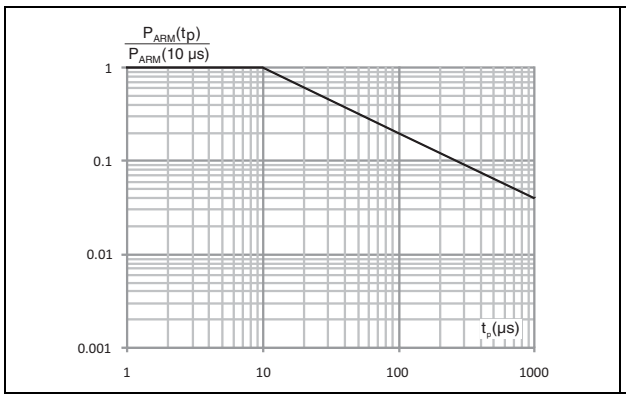

Figure 4. Non repetitive surge peak forward current versus overload duration (maximum values)

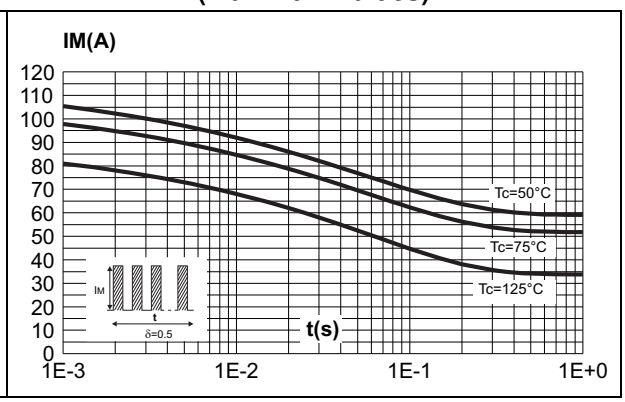

Figure 5. Relative variation of thermal impedance junction to case versus pulse duration

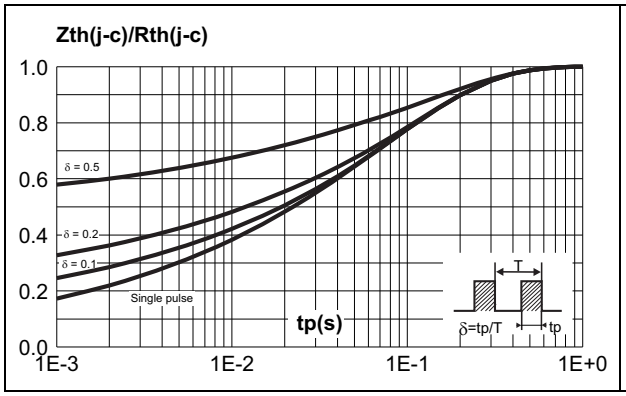

Figure 6. Reverse leakage current versus reverse voltage applied (typical values)

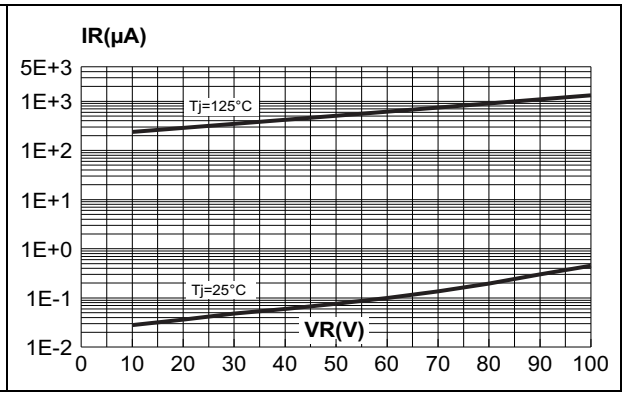

Figure 7. Junction capacitance versus reverse voltage applied (typical values)

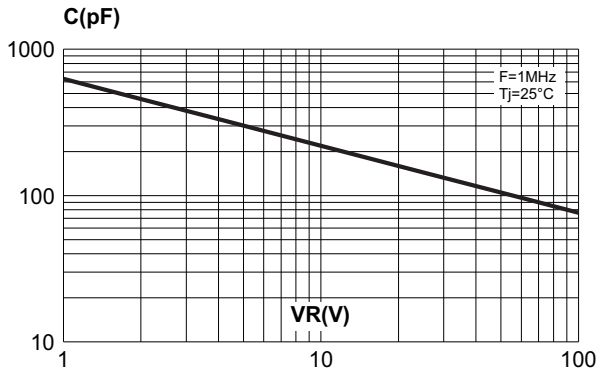

Figure 8. Forward voltage drop versus forward current (maximum values)

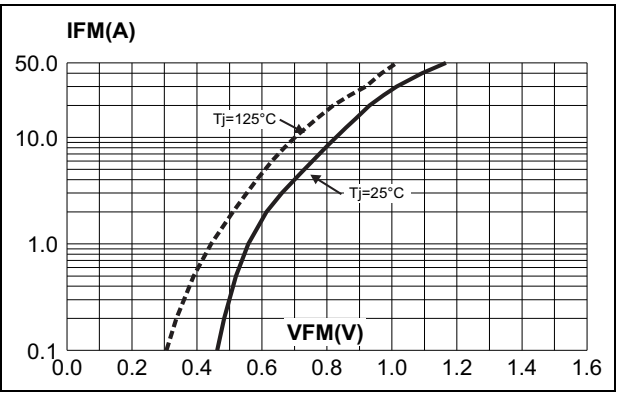

Figure 9. Thermal resistance junction to ambient versus copper surface under tab

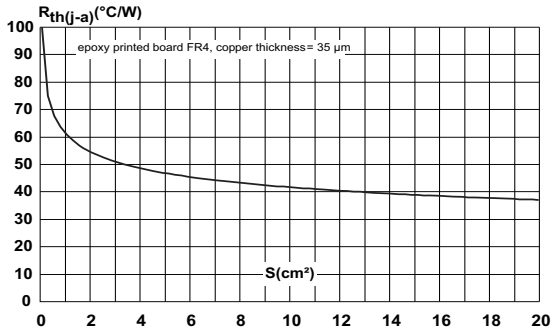

2 Package Information

- Epoxy meets UL94,V0
- Cooling method: by conduction (C)

In order to meet environmental requirements, ST offers these devices in different grades of ECOPACK® packages, depending on their level of environmental compliance. ECOPACK® specifications, grade definitions and product status are available at: *www.st.com*. ECOPACK® is an ST trademark.

Figure 10. DPAK dimension definitions

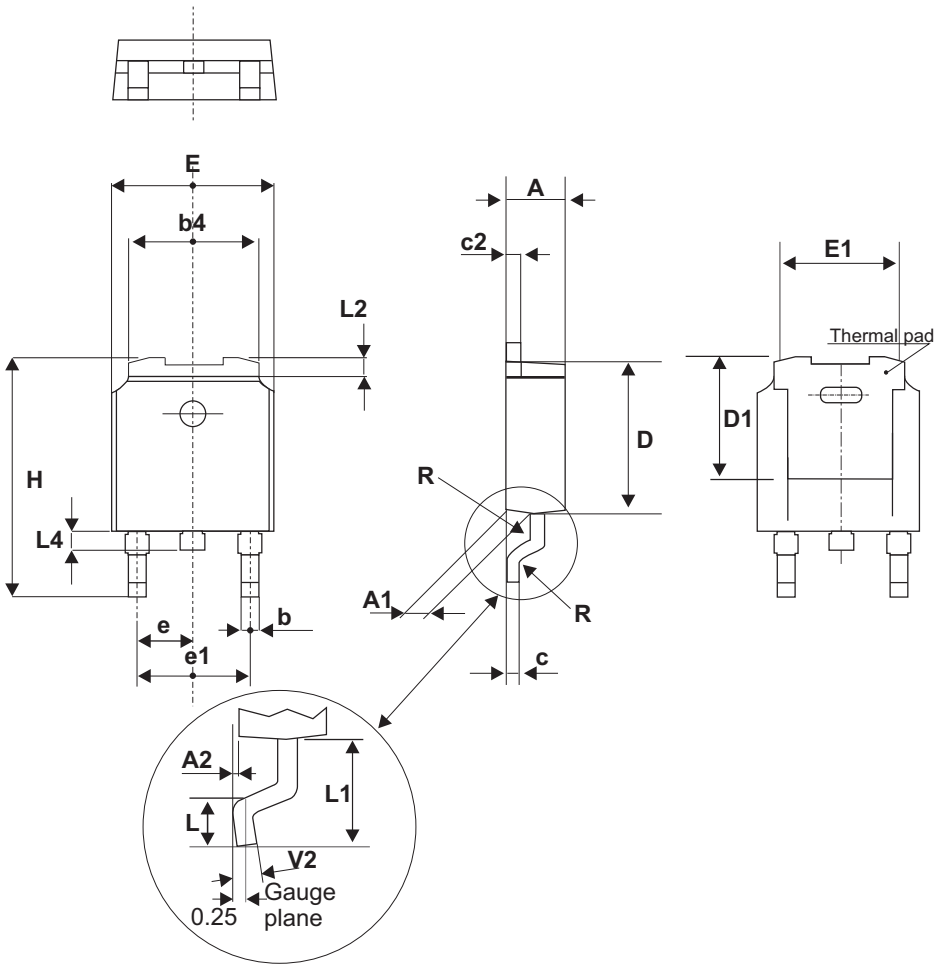

Note: This package drawing may slightly differ from the physical package. However, all the specified dimensions are guaranteed.

Table 5. DPAK dimension values

Ref.	Dimensions					
	Millimeters			Inches		
	Min.	Typ.	Max.	Min.	Typ.	Max.
A	2.18		2.40	0.085		0.094
A1	0.90		1.1	0.035		0.043
A2	0.03		0.23	0.001		0.01
b	0.64		0.90	0.025		0.035
b4	4.95		5.46	0.195		0.215
c	0.46		0.61	0.018		0.024
c2	0.46		0.60	0.018		0.024
D	5.97		6.22	0.235		0.245
D1	5.10			0.201		
E	6.35		6.73	0.250		0.265
E1	4.32			0.170		
e1	4.4		4.7	0.173		0.185
H	9.35		10.40	0.368		0.407
L	1.0		1.78	0.039		0.070
L2			1.27			0.05
L4	0.6		1.02	0.024		0.040
V2	0°		8°	0°		8°

Figure 11. DPAK footprint dimensions (in mm)

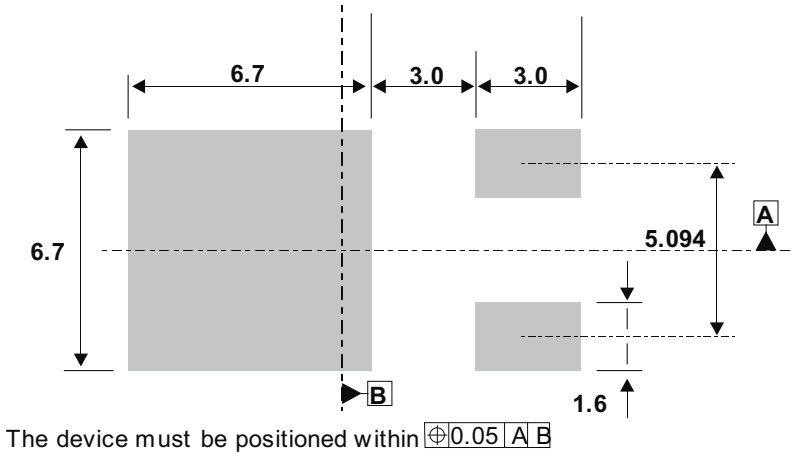

Figure 12. IPAK dimension definitions

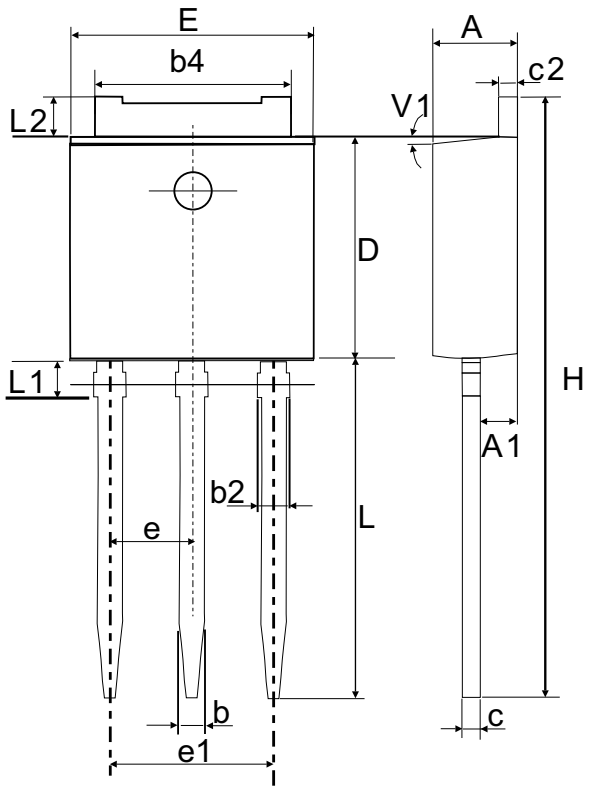

Note: This package drawing may slightly differ from the physical package. However, all the specified dimensions are guaranteed.

Table 6. IPAK dimension values

Ref.	Dimensions					
	Millimeters			Inches		
	Min.	Typ.	Max.	Min.	Typ.	Max.
A	2.20		2.40	0.086		0.094
A1	0.90		1.10	0.035		0.043
A3	0.70		1.30	0.027		0.051
B	0.64		0.90	0.025		0.035
B2	5.20		5.40	0.204		0.212
B3			0.95			0.037
B5		0.30			0.035	
C	0.45		0.60	0.017		0.023
C2	0.48		0.60	0.019		0.023
D	6		6.20	0.236		0.244
E	6.40		6.65	0.252		0.262
e		2.28			0.090	
G	4.40		4.60	0.173		0.181
H		16.10			0.634	
L	9		9.40	0.354		0.370
L1	0.8		1.20	0.031		0.047
L2		0.80	1		0.031	0.039
V1		10°			10°	

3 Ordering Information

Table 7. Ordering information

Order code	Marking	Package	Weight	Base qty	Delivery mode
STPS5H100B	S5H100	DPAK	0.30 g	75	Tube
STPS5H100B-TR	S5H100			2500	Tape and reel
STPS5H100H	S5H100H	IPAK	0.40 g	75	Tube

4 Revision history

Table 8. Document revision history

Date	Revision	Description of Changes
Jul-2003	6B	Last issue.
03-Nov-2005	7	DPAK footprint dimensions updated.
15-Feb-2006	8	ECOPACK statement added.
05-Mar-2007	9	IPAK package added.
01-Aug-2014	10	Updated DPAK package information.
17-Sep-2014	11	Updated *Table 2*, title *Figure 3* and *Figure 11*.
14-Oct-2014	12	Updated DPAK package information.