Chipsmall Limited consists of a professional team with an average of over 10 year of expertise in the distribution of electronic components. Based in Hongkong, we have already established firm and mutual-benefit business relationships with customers from,Europe,America and south Asia,supplying obsolete and hard-to-find components to meet their specific needs.

With the principle of “Quality Parts,Customers Priority,Honest Operation,and Considerate Service”,our business mainly focus on the distribution of electronic components. Line cards we deal with include Microchip,ALPS,ROHM,Xilinx,Pulse,ON,Everlight and Freescale. Main products comprise IC,Modules,Potentiometer,IC Socket,Relay,Connector.Our parts cover such applications as commercial,industrial, and automotives areas.

We are looking forward to setting up business relationship with you and hope to provide you with the best service and solution. Let us make a better world for our industry!

Contact us

Tel: +86-755-8981 8866 Fax: +86-755-8427 6832
Email & Skype: info@chipsmall.com Web: www.chipsmall.com
Address: A1208, Overseas Decoration Building, #122 Zhenhua RD., Futian, Shenzhen, China

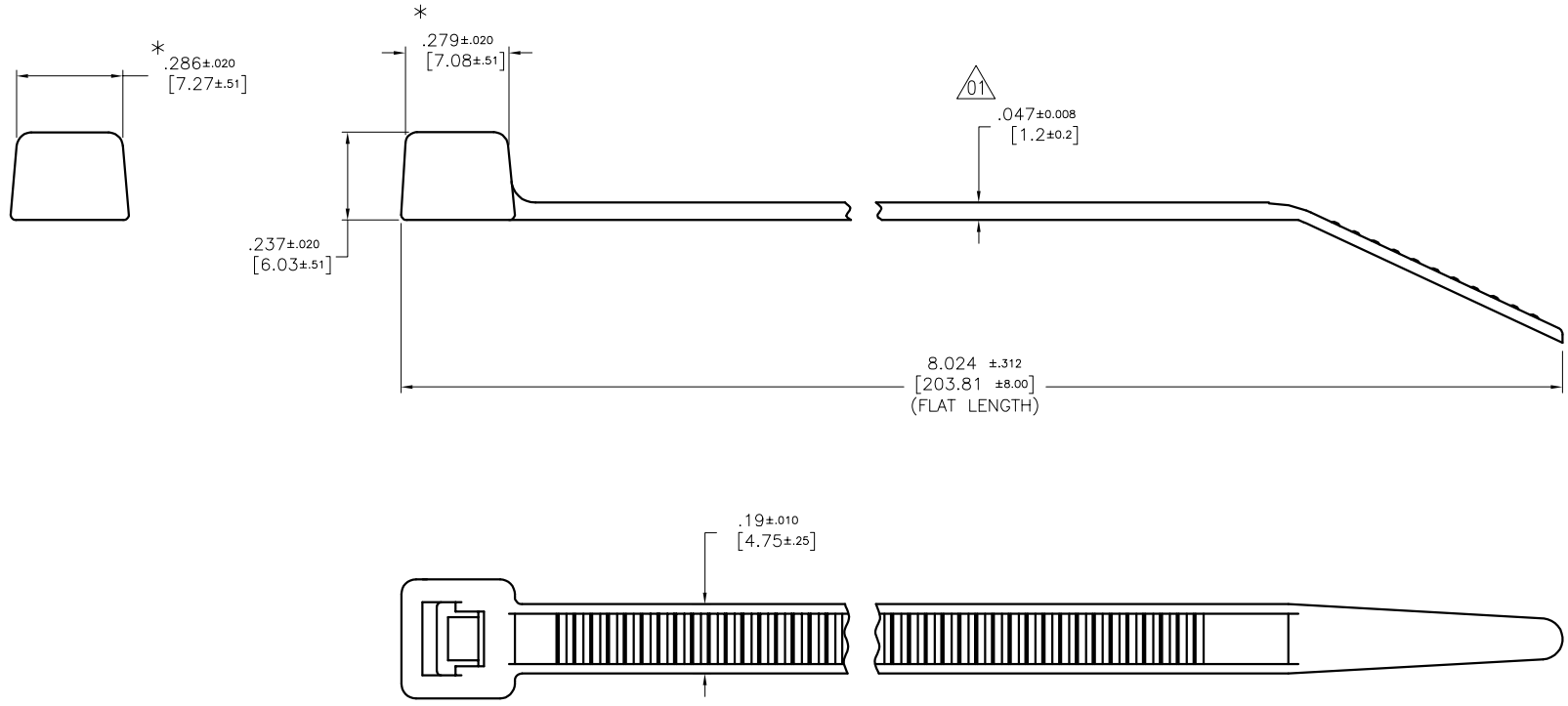

REDUCED NO SCALE

① T50R_PP

- POLYPROPYLENE MATERIAL
- CABLE TIE COLOR (CONSULT HELLERMANNTYTON)
- CABLE TIE SIZE

PART NUMBER	BUNDLE DIA MAX	BUNDLE DIA MIN	MIN LOOP TENSILE (LBS)
① T50R_PP	1.750 / 44.45	.50 / 12.70	25

INVENTORS

HellermannTyton®

ALL PROPRIETARY RIGHTS IN THE SUBJECT MATTER SHOWN ON THIS DRAWING ARE EXCLUSIVE PROPERTY OF HELLERMANNTYTON

name	date	city, state

REVISION

DRAWING

level 01

date 10/04/06

by AAC

ECN # 010519

part level –

DIMENSIONS

TOLERANCES

.XXXX= ±.0005

.XXX= ±.005

.XX= ±.01

.X= ±.03

∠= ±0.5°

unless otherwise specified

units inches

PART

number SEE CHART

phase PRODUCTION

name T50R POLYPROPYLENE STANDARD CABLE TIE

material POLYPROPYLENE

DRAWING

FORMAT AH version P

CAD ACAD

scale 2X

computer file number CT\CST\PPP\2050007_01

previous number

drawn S.S.L. 12/04/97

checked KAC 10/04/06

approved

type CUSTOMER

sheet 1 of 1

number CT2050007CSTPPP