Chipsmall Limited consists of a professional team with an average of over 10 year of expertise in the distribution of electronic components. Based in Hongkong, we have already established firm and mutual-benefit business relationships with customers from,Europe,America and south Asia,supplying obsolete and hard-to-find components to meet their specific needs.

With the principle of “Quality Parts,Customers Priority,Honest Operation,and Considerate Service”,our business mainly focus on the distribution of electronic components. Line cards we deal with include Microchip,ALPS,ROHM,Xilinx,Pulse,ON,Everlight and Freescale. Main products comprise IC,Modules,Potentiometer,IC Socket,Relay,Connector.Our parts cover such applications as commercial,industrial, and automotives areas.

We are looking forward to setting up business relationship with you and hope to provide you with the best service and solution. Let us make a better world for our industry!

Contact us

Tel: +86-755-8981 8866 Fax: +86-755-8427 6832
Email & Skype: info@chipsmall.com Web: www.chipsmall.com
Address: A1208, Overseas Decoration Building, #122 Zhenhua RD., Futian, Shenzhen, China

THIS COPY IS PROVIDED ON A RESTRICTED BASIS AND IS NOT TO BE USED IN ANY WAY DETRIMENTAL TO THE INTERESTS OF PANDUIT CORP.

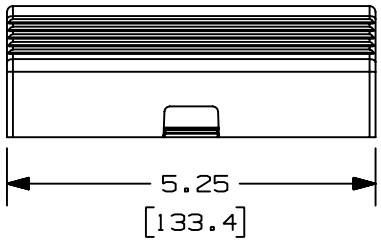

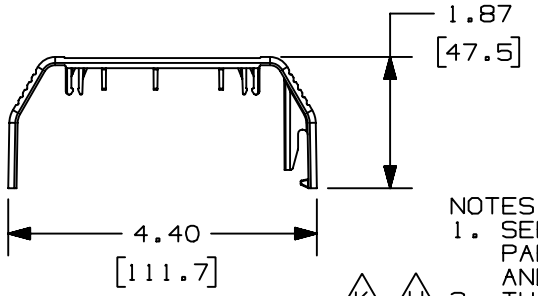

PANDUIT P/N	WEIGHT
T70TR	.242 LBS/PC (108.2 g/PC)

L G

NOTES:
1. SEE CURRENT CATALOG FOR ADDITIONAL PART SUFFIXES TO INDICATE COLOR AND OR PACKAGE QUANTITY.
2. THIS PRODUCT IS INTENDED TO BE USED WITH PANDUIT TYPE LDS, LDP, LD, PD, T70, AND T45 RACEWAYS.
3. DIMENSIONS IN PARENTHESIS ARE IN METRIC.

K H

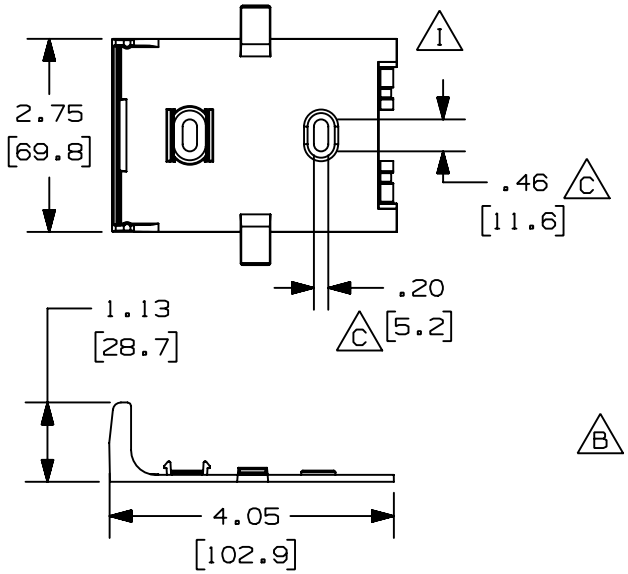

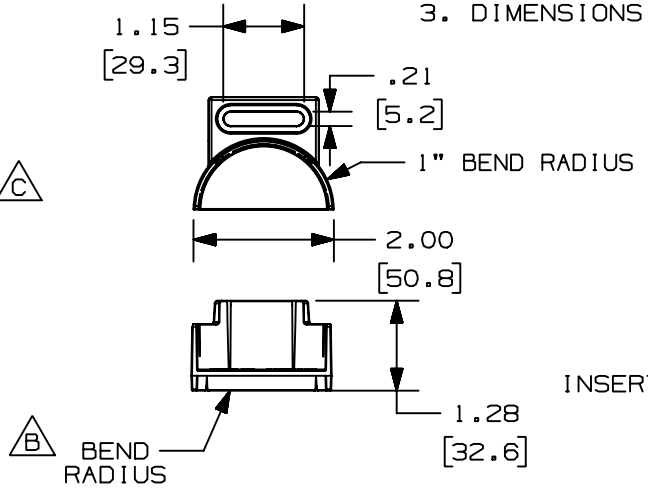

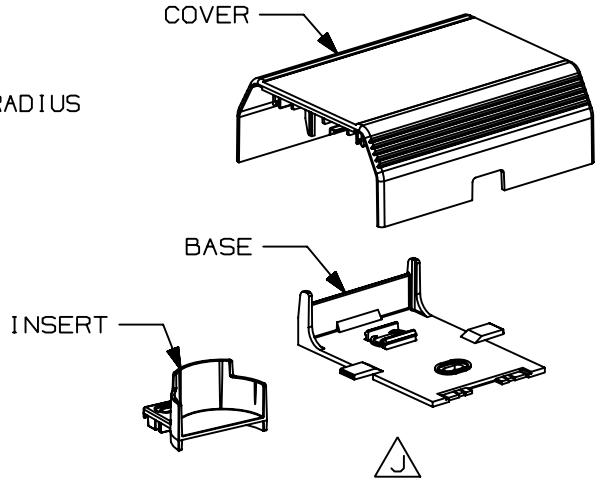

REV	DATE	BY	CHK	DESCRIPTION	ECN - R	CUST	SUP
-	-------	---	---	L. REVISED WEIGHT PER PC: WAS PER 10 PCS	35541-49	----	----
5	05-18-04	JBN	BKR	K. REVISED NOTE #2 J. REVISED CAD FILE NAME	35541-49	RGRO	RGRO
4	01-13-00	JHNU	BKR	I. REVISED GEOMETRY FOR T45 BREAKOUT H. ADDED T70 AND T45 TO NOTE 2	35541-49	HIW	HIW
-	--------	---	---	G. 2.42 LB (1082g) WAS 2.2 LB (984g)	--------	---	---
3	12-20-99	MSO	HIW	F. PVC WAS ABS/POLYCARBONATE E. REVISED DRAWING TITLE	35541-49	HIW	HIW
2	06-22-98	DW	HIW	D. TITLE WAS SINGLE 70 TRANSITION B. ADDED TRANSITION BEND RADIUS; C. ADDED HOLE SIZE	35541-49	HIW	HIW
1	10-18-96	PM	CEF	A. REVISED BREAKOUT GEOMETRY	35541-49	CEF	
R	10-08-96	PM	CEF	RELEASED TO PRODUCTION	35541-49	CEF	CEF

CAD FILENAME/LAYERS: D35541CW_DC_T70TR_04A.prt

PANDUIT CORP. TINLEY PARK, ILLINOIS

T-70 TRANSITION WITH BEND RADIUS (T70TR)
CUSTOMER DRAWING

D B E

UNLESS OTHERWISE SPECIFIED, DIMENSIONAL TOLERANCES ARE:
(.X) ± (.XXX) ±.010(.3)
(.XX) ±.03(.8) ANGLES ±

UNLESS OTHERWISE SPECIFIED, ALL DIMENSIONS ARE GIVEN IN INCHES, THIRD ANGLE PROJECTION.

DRAWN BY: PM
DATE: 10-08-96
CHK'D: CEF
MAT'L: F PVC
SCALE: NONE
DRAWING NO.: 35541-49
DWG SIZE: A