Chipsmall Limited consists of a professional team with an average of over 10 year of expertise in the distribution of electronic components. Based in Hongkong, we have already established firm and mutual-benefit business relationships with customers from,Europe,America and south Asia,supplying obsolete and hard-to-find components to meet their specific needs.

With the principle of “Quality Parts,Customers Priority,Honest Operation,and Considerate Service”,our business mainly focus on the distribution of electronic components. Line cards we deal with include Microchip,ALPS,ROHM,Xilinx,Pulse,ON,Everlight and Freescale. Main products comprise IC,Modules,Potentiometer,IC Socket,Relay,Connector.Our parts cover such applications as commercial,industrial, and automotives areas.

We are looking forward to setting up business relationship with you and hope to provide you with the best service and solution. Let us make a better world for our industry!

Contact us

Tel: +86-755-8981 8866 Fax: +86-755-8427 6832
Email & Skype: info@chipsmall.com Web: www.chipsmall.com
Address: A1208, Overseas Decoration Building, #122 Zhenhua RD., Futian, Shenzhen, China

Copyright FCI.

FCIconnect.com

PRODUCT NUMBER	PITCH
TAxx01xx00J0G	5.00 mm

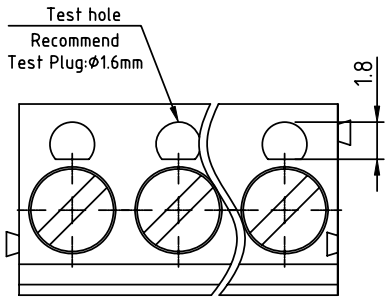

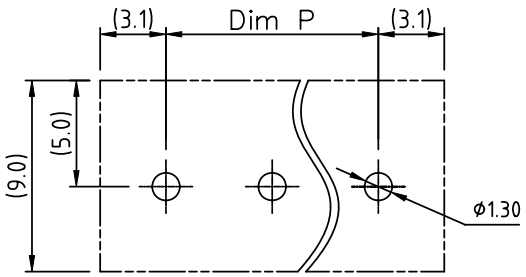

RECOMMENDED P.C.B LAYOUT
TOP VIEW

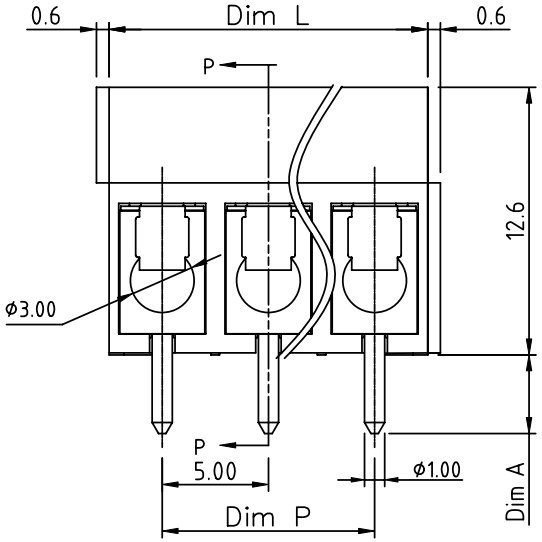

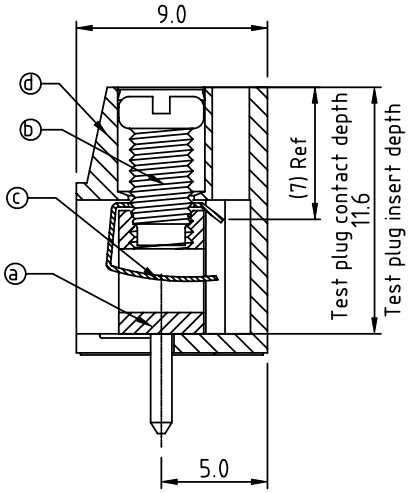

Section P-P

Material

- a Terminal body : Brass(CuZn) , Tin plated
- b Terminal screw: Steel Zinc plating "-" slot type
- c Wire guard: Stainless steel
- d Terminal housing: Thermoplastic (UL94V-0)

Electrical UL/VDE

- Voltage rating: 250VAC/250VAC
- Current rating: 16A/16A
- Wire range:0.5-2.5mm^2
- Solid wire(AWG): 14-26
- Stranded wire(AWG): 14-26
- Torque: 2.6Lb-In/0.5Nm
- Screw: M3
- Wire strip length: 6-7mm
- Withstanding Voltage: 1.5KV/2KV
- Operating temperature: -40°C to +115°C
- Soldering temperature: 260°C±5°C/5 Sec
- SAFETY APPROVOL DETA:

PART NO.: TA xx 01 x x 00J0 G

N = Number of poles
Dim L=Nx5.0
Dim P=(N-1)x5.0

	Dim L	Dim P
2-6p	±0.15	±0.10
7-12p	±0.20	±0.20
13-18p	±0.30	±0.25
19-24p	±0.40	±0.30

No. of poles
02 2 poles
03 3 poles
... ...
24 24 poles

Color
0 Black (RAL9005)
2 Red (RAL3001/D)
3 Orange(RAL2011/P)
4 Yellow(RAL1018/A)
5 Green(RAL6018/T)
6 Blue (RAL5015/A)
8 Grey(RAL7035/D)
9 White(RAL1102)
C Green(RAL6018/U)

Dim A
0 4.4mm
1 3.8mm
2 3.5mm

RoHS compliant
(lead<4%)
In copper Alloy

mat'l. code				surface ASME Y14.5	tolerance ASME Y14.5	projection
ltr	ecn no	dr	date	tolerances unless otherwise specified		
				angles	linear X.±0.5 / X.X±0.3 / X.XX±0.1	MM
				X°±1°		scale
				dr	HANKE FENG	010714
				engr	HANKE FENG	010714
				chr	SHI JUN	010714
				appd	SHI JUN	010714
sheet index	revision	A				
	sheet	1				

product family: TERMINAL BLOCK

title: TERMINAL BLOCK
WIRE PROTECTOR,180D WIRE INLET

dwg no: TAxx01xx00J0G — sheet 1 of 1 — size A4

type: CUSTOMER Drawing