Chipsmall Limited consists of a professional team with an average of over 10 year of expertise in the distribution of electronic components. Based in Hongkong, we have already established firm and mutual-benefit business relationships with customers from,Europe,America and south Asia,supplying obsolete and hard-to-find components to meet their specific needs.

With the principle of “Quality Parts,Customers Priority,Honest Operation,and Considerate Service”,our business mainly focus on the distribution of electronic components. Line cards we deal with include Microchip,ALPS,ROHM,Xilinx,Pulse,ON,Everlight and Freescale. Main products comprise IC,Modules,Potentiometer,IC Socket,Relay,Connector.Our parts cover such applications as commercial,industrial, and automotives areas.

We are looking forward to setting up business relationship with you and hope to provide you with the best service and solution. Let us make a better world for our industry!

Contact us

Tel: +86-755-8981 8866 Fax: +86-755-8427 6832
Email & Skype: info@chipsmall.com Web: www.chipsmall.com
Address: A1208, Overseas Decoration Building, #122 Zhenhua RD., Futian, Shenzhen, China

NOTES:

1. HOUSING - BRASS, NICKEL PLATE.
2. CONTACT - COPPER ALLOY, SILVER PLATED.
3. LATCH BUTTON - MOLDED BLACK THERMOPLASTIC.
4. HANDLE - PLASTIC, MOLDED ACRYLONITRILE.
5. CONTACT INSULATOR - MOLDED THERMOPLASTIC
6. CABLE CLAMP - STEEL, ELECTRO-TIN.

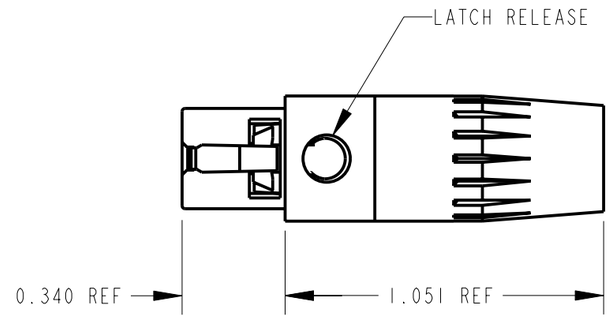

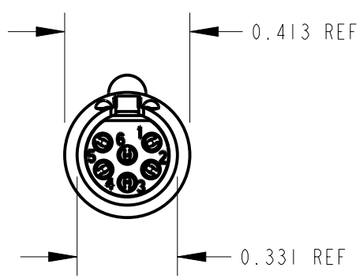

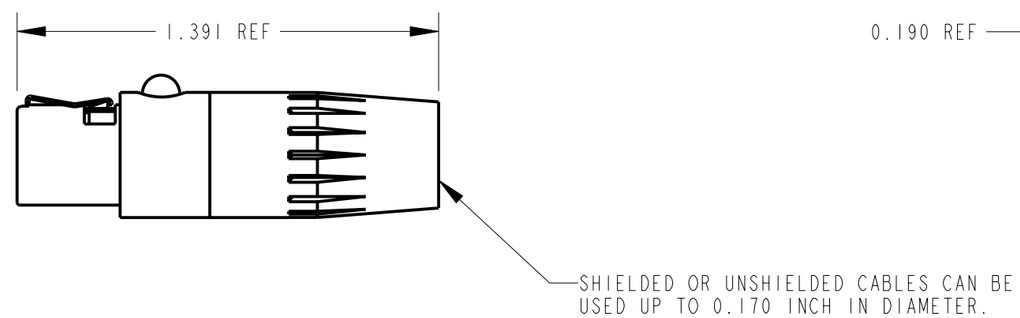

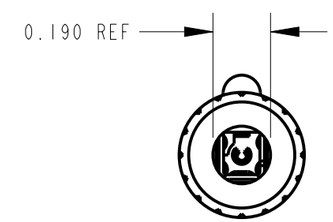

CUSTOMER DRAWING

REV	ECO NUMBER	DATE	BY	APVD
E	ECO #20884	3-20-97	RC	DK
D	ECO #20189	9-6-95	GHJ	GHJ
C	ECO #20085	9-6-95	GHJ	GHJ

REVISIONS

STAR SYMBOL DENOTES CRITICAL DIMENSION

UNLESS OTHERWISE SPECIFIED

1. ALL DIMENSIONS IN INCHES
   - TWO PLACE DECIMALS ±0.01
   - THREE PLACE DECIMALS ±0.005
   - FRACTIONAL DIMENSIONS ±1/64
   - ANGLES ±1°
   - ALL DIA. CONCENTRIC WITHIN 0.005 T.I.R.
2. FEATURES ON THE SAME CENTERLINE MUST BE ALIGNED WITHIN ±0.002
3. REMOVE ALL BURRS

DO NOT SCALE DRAWING

THIS DRAWING DESCRIBES A DESIGN CONSIDERED PROPRIETARY IN NATURE, DEVELOPED AND MANUFACTURED BY SWITCHCRAFT INC. AND IS RELEASED ON A CONFIDENTIAL BASIS FOR IDENTIFICATION PURPOSES ONLY.

SIZE	WIDTH	MULT	LBS/M	TEMPER

FINISH
SPEC No.

MATERIAL
SPEC No.

FIRST USED ON

SCALE 2:1

DATE DRAWN	BY	CHKD	APVD
6-Sep-95	GHJ	GHJ 9-6-95	GHJ 9-6-95

Switchcraft®

SHEET 1 OF 1

NAME: TINI Q-G FEMALE STRAIGHT CORD PLUG

PART No. TA6FL

REV E

Pro/Engineer CAD File B

ROUTING 146 112