Chipsmall Limited consists of a professional team with an average of over 10 year of expertise in the distribution of electronic components. Based in Hongkong, we have already established firm and mutual-benefit business relationships with customers from,Europe,America and south Asia,supplying obsolete and hard-to-find components to meet their specific needs.

With the principle of “Quality Parts,Customers Priority,Honest Operation,and Considerate Service”,our business mainly focus on the distribution of electronic components. Line cards we deal with include Microchip,ALPS,ROHM,Xilinx,Pulse,ON,Everlight and Freescale. Main products comprise IC,Modules,Potentiometer,IC Socket,Relay,Connector.Our parts cover such applications as commercial,industrial, and automotives areas.

We are looking forward to setting up business relationship with you and hope to provide you with the best service and solution. Let us make a better world for our industry!

Contact us

Tel: +86-755-8981 8866 Fax: +86-755-8427 6832
Email & Skype: info@chipsmall.com Web: www.chipsmall.com
Address: A1208, Overseas Decoration Building, #122 Zhenhua RD., Futian, Shenzhen, China

SIEMENS

Window Discriminator

TCA 965 B

Pb-free lead plating; RoHS compliant

Bipolar IC

Features

- Two window settings
  - direct setting of lower and upper edge voltage (window edges)
  - indirect setting by window center voltage and half window width
- Adjustable hysteresis
- Digital outputs with open collectors for currents up to 50 mA
- Adjustable reference voltage V_{Stab}

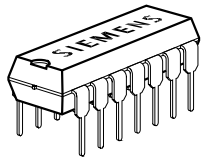

PG-DIP-14-1

Type	Ordering Code	Package
■ TCA 965 B	Q67000-A8338	PG-DIP-14-1

■ Not for new design

The window discriminator compares an input voltage to a defined voltage window. The digital outputs show whether the input voltage is below, within or above this window.

The TCA 965 B window discriminator is especially suitable as a tracking or compensating controller with a dead band in control engineering and for the selection of DC voltages within a certain tolerance of the required setpoint value in measurement engineering. When it is used as a Schmitt trigger, switching frequencies up to a typical value of 50 kHz are possible.

Functional Description

Amplifier Amp 3 increases the voltage of the reference source R to V_{Stab} = 2 x V_{REF}. The amplification factor can be altered by external wiring. With direct setting of the window, the input voltage appears on amplifier Amp 1 (V_8), the upper edge voltage on comparator K2 (V_6) and the lower edge voltage on comparator K1 (V_7).

With indirect setting of the window, the input voltage appears on inputs V_6 and V_7, while the center voltage is connected to amplifier A1 (V_8).

The voltage applied to the input (V_9) of amplifier Amp 2 is subtracted symmetrically from the output voltage of amplifier Amp 1 and added. The comparators switch with hysteresis. The logic gates have open-collector outputs.

If the inhibit input A or B is connected to ground, output A or B will always be high.

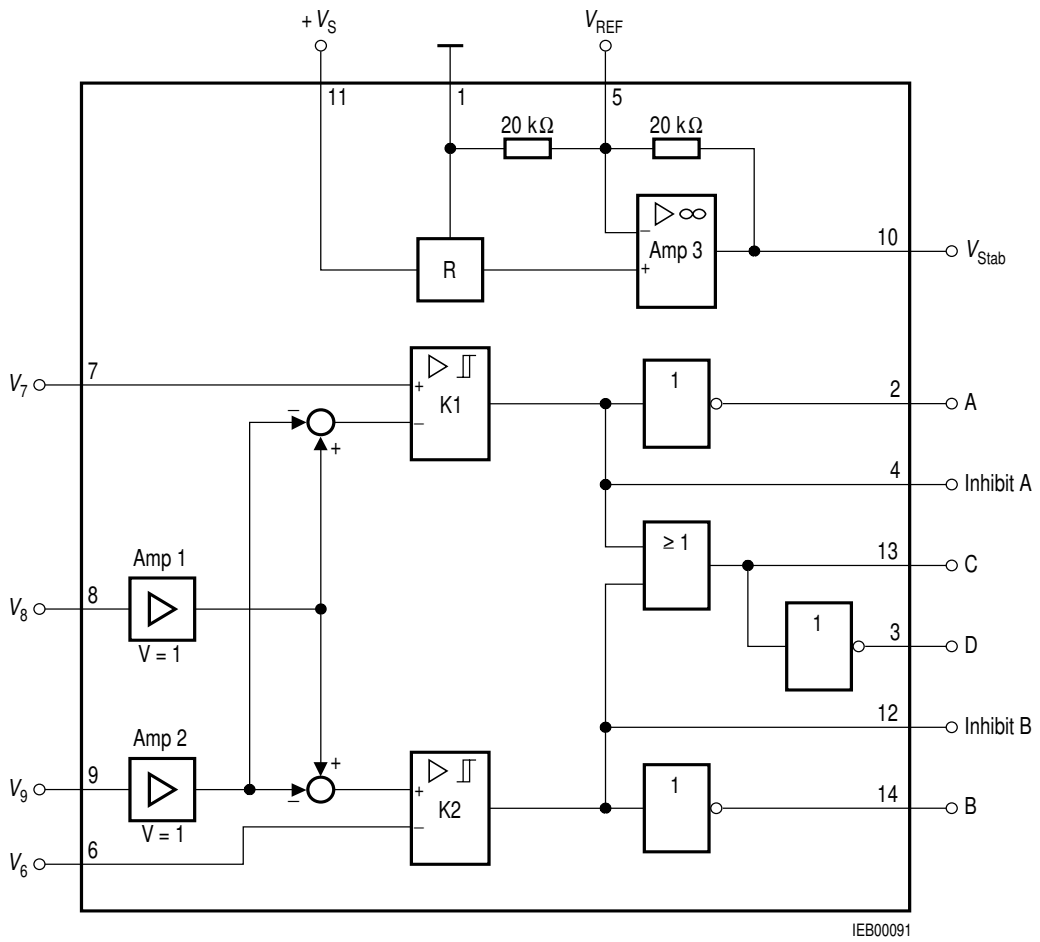

Outputs A, B, C, D are open-collector

Block Diagram

Pin Configuration
(top view)

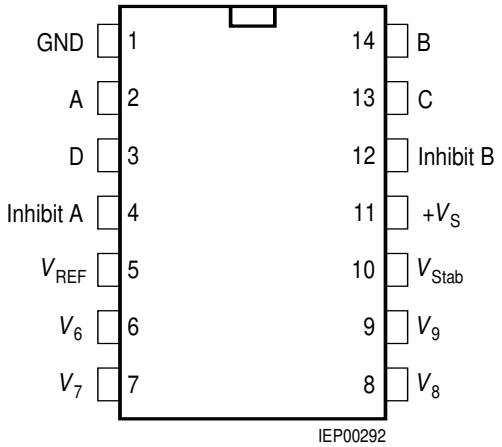

Pin Definitions and Functions

Pin	Symbol	Pin Function in	
		Direct Setting of Window	Indirect Setting of Window
1	GND	GND	
2	A	Logic output A	
3	D	Logic output D = A @ B (AND)	
4	Inhibit A	Connected to GND: logic output A = HIGH	
5	V_{REF}	Internal V_{REF} = 3 V	
6	V_6	Upper edge voltage	Input voltage $V_{6/7}$
7	V_7	Lower edge voltage	Input voltage $V_{6/7}$
8	V_8	Input voltage	Center voltage
9	V_9	GND	Half window width
10	V_{Stab}	Internal V_{Stab} = 6 V	
11	+ V_S	Supply voltage	
12	Inhibit B	Connected to GND: logic output B = HIGH	
13	C	Logic output C = A @ B (NAND)	
14	B	Logic output B	

Absolute Maximum Ratings
Maximum ratings for ambient temperature T_A = – 25 to 85 °C

Parameter	Symbol	Limit Values		Unit
		min.	max.	
Supply voltage (pin 11)	V_S	–	30	V
Difference in input voltage between pins 6, 7, 8	V_I	–	15	V
Input voltage (pins 6, 7, 8, 9)	V_I	–	30	V
Output current (pins 2, 3, 13, 14)	I_Q	–	50	mA
Output voltage (pins 2, 3, 13, 14)		–		
independent of V_S	V_Q	–	30	V
Voltage on V_{REF} (pin 5)	V_R	–	8	V
Output current of stabilized voltage (pin 10)	I_{10}	–	10	mA
Inhibit input voltage (pins 4, 12)	V_{IH}	–	7	V
Junction temperature	T_j		150	°C
Storage temperature	T_{stg}	– 55	125	°C
Thermal resistance system - air PG-DIP-14-1	$R_{th\ SA}$	–	80	K/W

Operating Range

Supply voltage	V_S	4.5	30	V
Ambient temperature	T_A	– 25	85	°C

Characteristics
V_S = 10 V; T_A = 25 °C

Parameter	Symbol	Limit Values			Unit	Test Condition	Test Circuit
		min.	typ.	max.			
Current consumption	I_S	–	5	7	mA	$V_2, V_{13} = V_{QH}$	1
Input current (pins 6, 7, 8)	I_I	–	20	50	nA		1
Input current, pin 9	$-I_I$	–	400	3000	nA		1
Input offset voltage in direct setting of window	V_{IO}	– 20		20	mV		1
Input offset voltage in indirect setting of window	V_{IO}	– 50		50	mV		2
Input-voltage range on pins 6, 7, 8	V_I	1.5		$V_S - 1$	V	$\Delta V_I < 13$ V	1
Input-voltage range on pin 9	V_I	50		$V_S/2$	mV		2
Differential input voltage	$V_6 - (V_8 - V_9)$			13	V		
	$(V_8 + V_9) - V_7$			13	V		
Reference voltage	V_5	2.8	3	3.2	V	$I_{REF} = 0$	
Stabilized voltage on pin 10	V_{10}	5.5	6	6.5	V	$V_S > 7.9$ V	
TC of reference voltage	αV_5		0.4		mV/K		
Sensitivity of reference voltage to supply-voltage variation	$\Delta V_5/\Delta V_S$		2		mV/V		
Output reverse current	I_{QH}	–	–	10	µA	–	–
Output saturation voltage	V_{QL}		100	200	mV	I_Q = 10 mA	1
			500	800	mV	I_Q = 50 mA	
Hysteresis of window edges	$V_U - V_L$	18	22	35	mV		
Inhibit threshold	$V_{4,12}$	1		1.8	V		
Inhibit current	$I_{4,12}$	–	– 100	–	µA	–	–
Switching frequency	f_{dir}	–	20	–	kHz	–	1
	f_{ind}	–	50	–	kHz	–	2

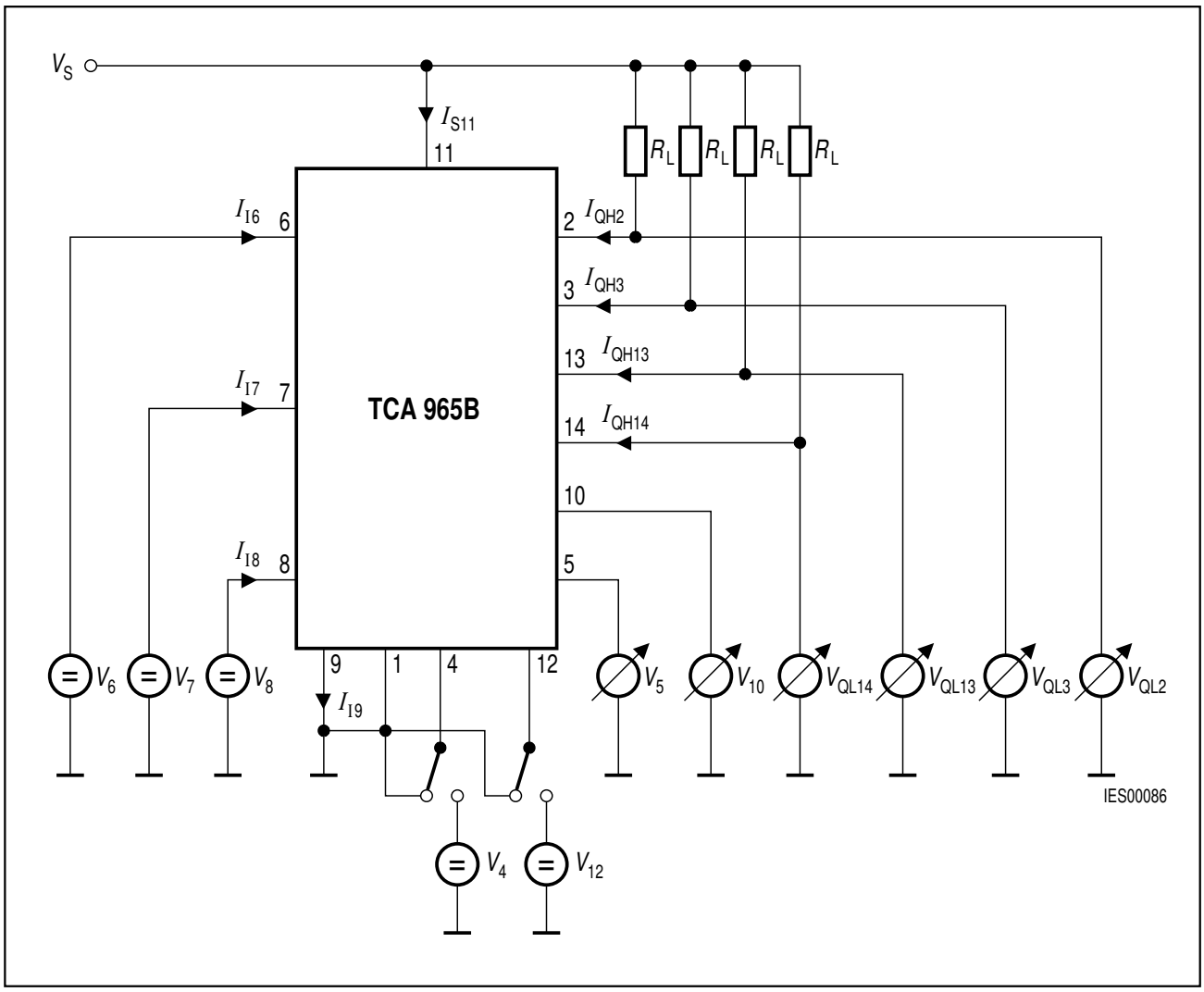

Test Circuit 1
Direct Setting of Window

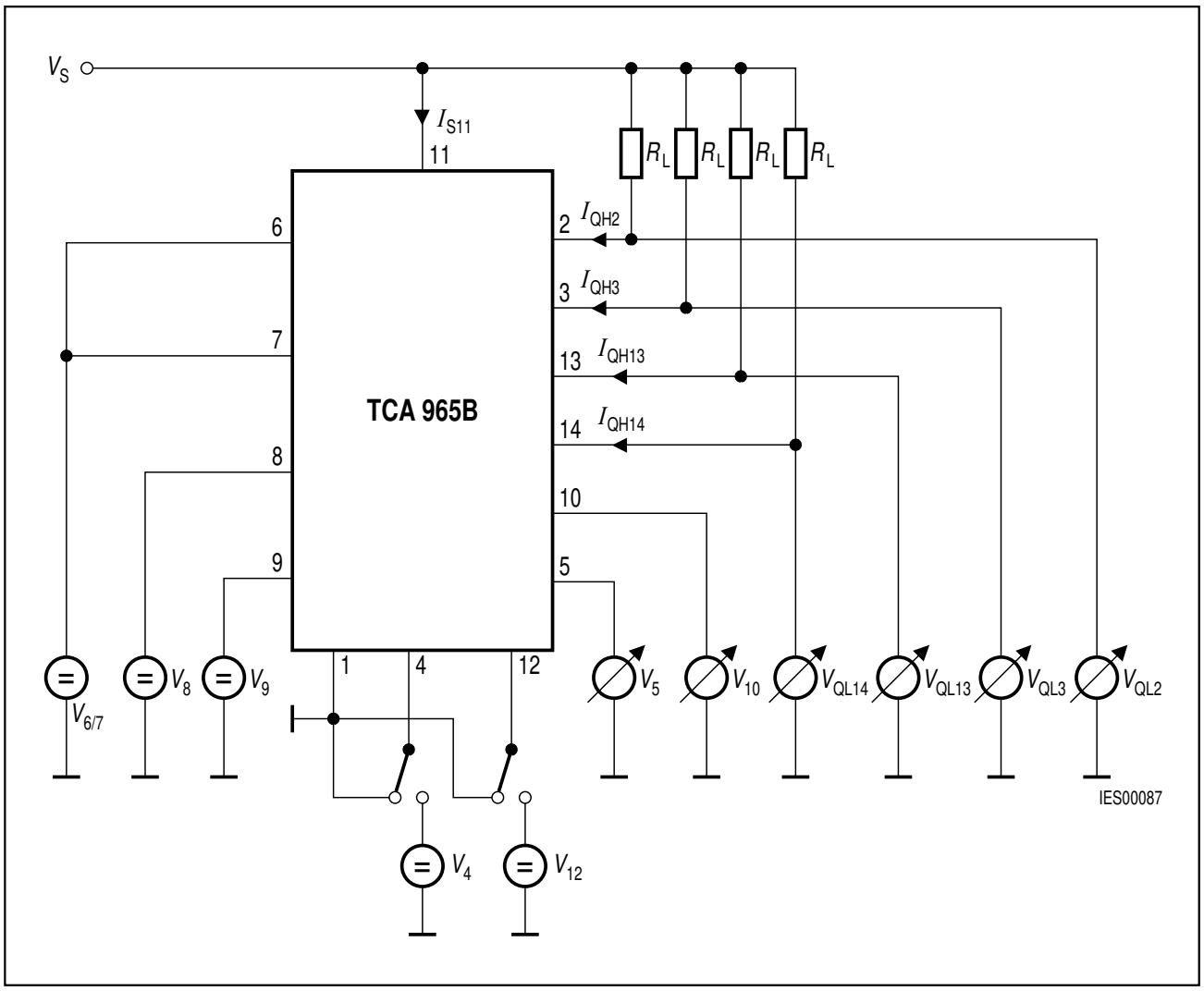

Test Circuit 2
Indirect Setting of Window by Center Voltage and Half Window Width

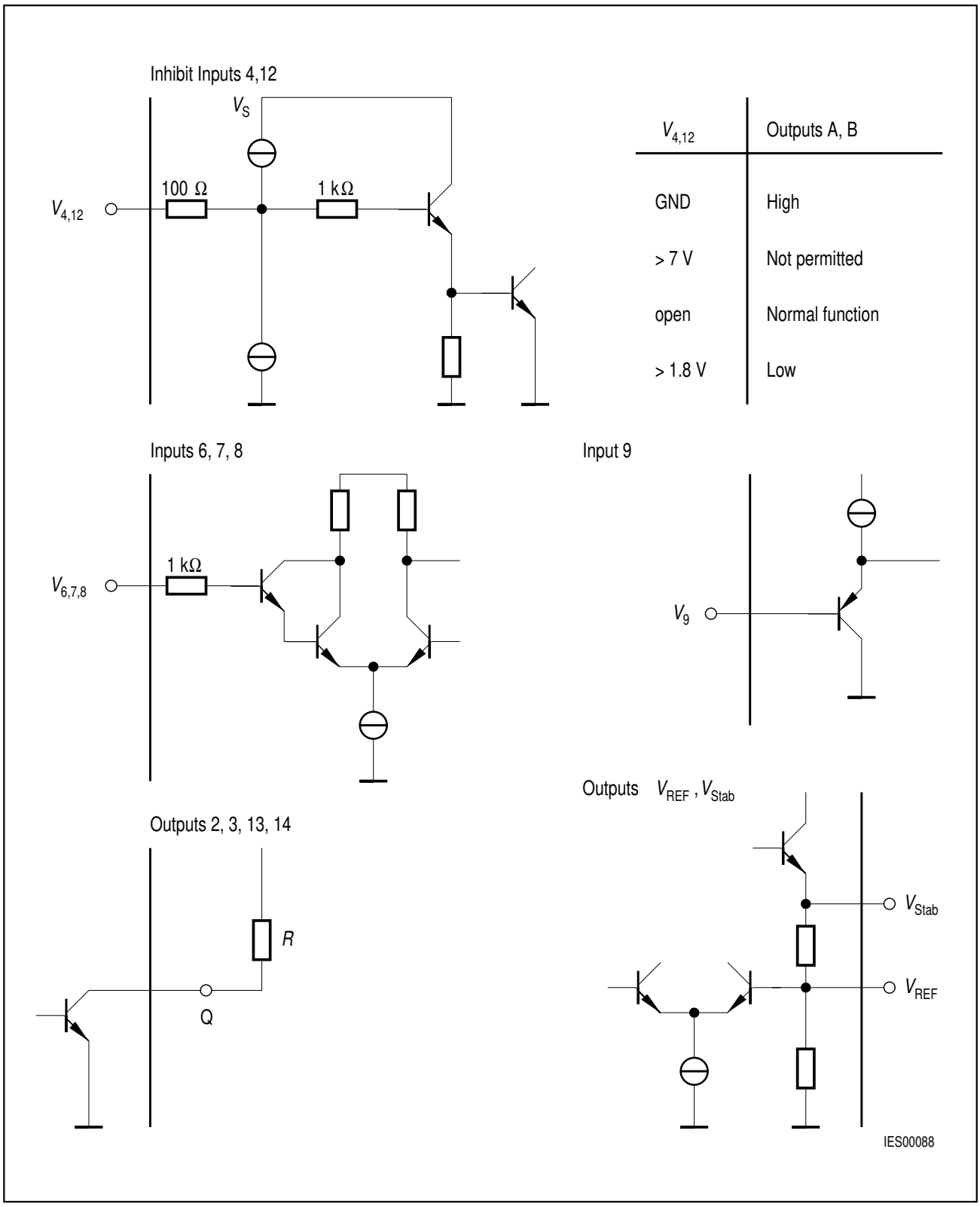

$V_{4,12}$	Outputs A, B
GND	High
> 7 V	Not permitted
open	Normal function
> 1.8 V	Low

Schematic Circuit Diagrams

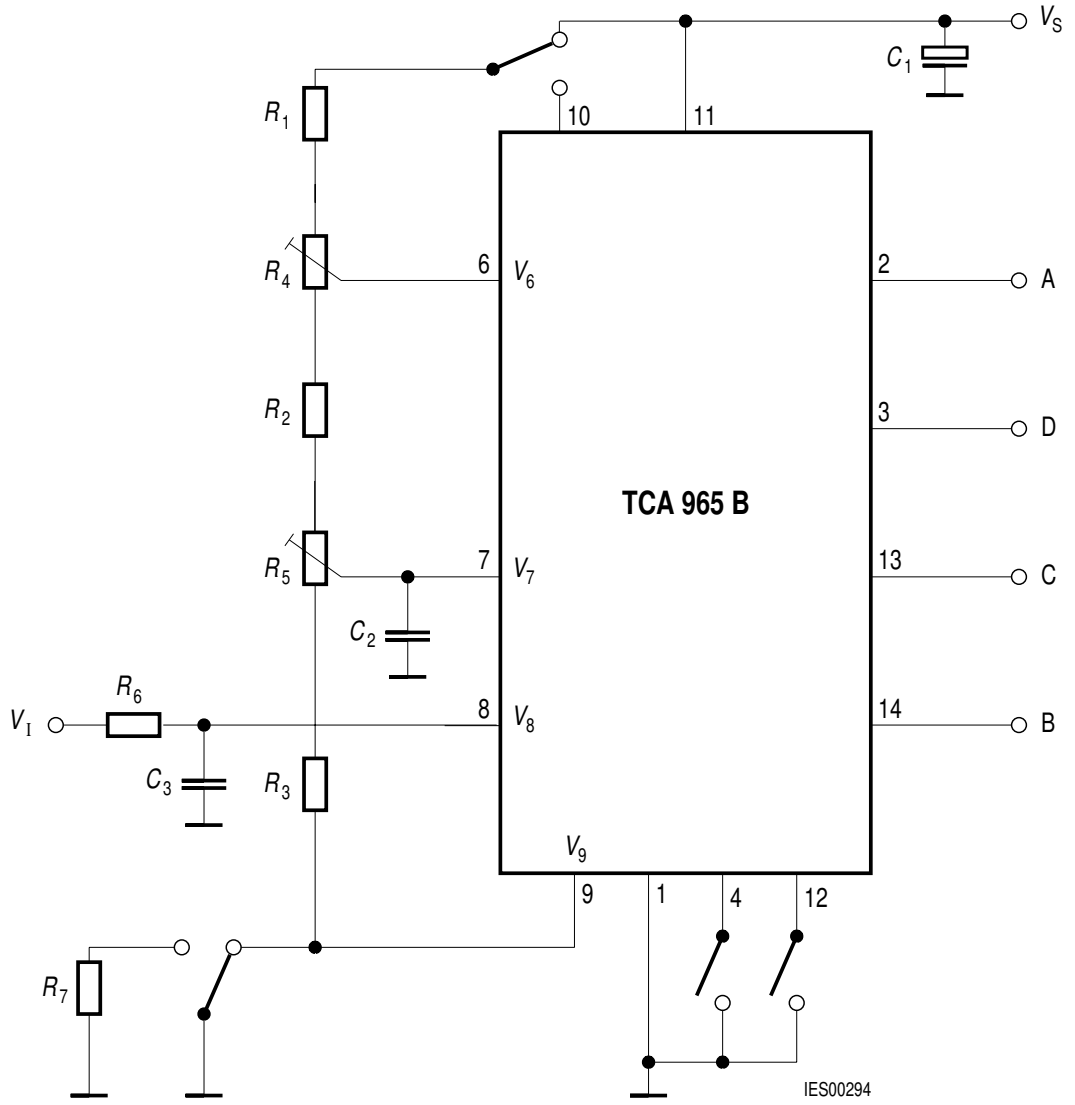

To increase the switching frequency, pin 9 may be grounded via R_7 (V_9 approx. 30...40 mV).

Application Circuit 1
Direct Setting of Lower and Upper Edge Voltages

$V_6 - V_9$ = Upper edge voltage
$V_7 + V_9$ = Lower edge voltage
V_8 = Input voltage

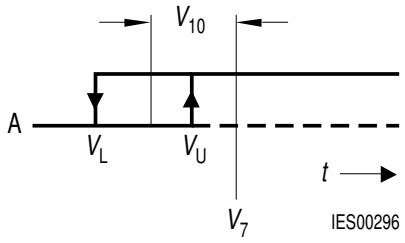

Definition of the Offset Voltage V_{IO}

$$V_{10} = \frac{V_L + V_U}{2} - V_7$$

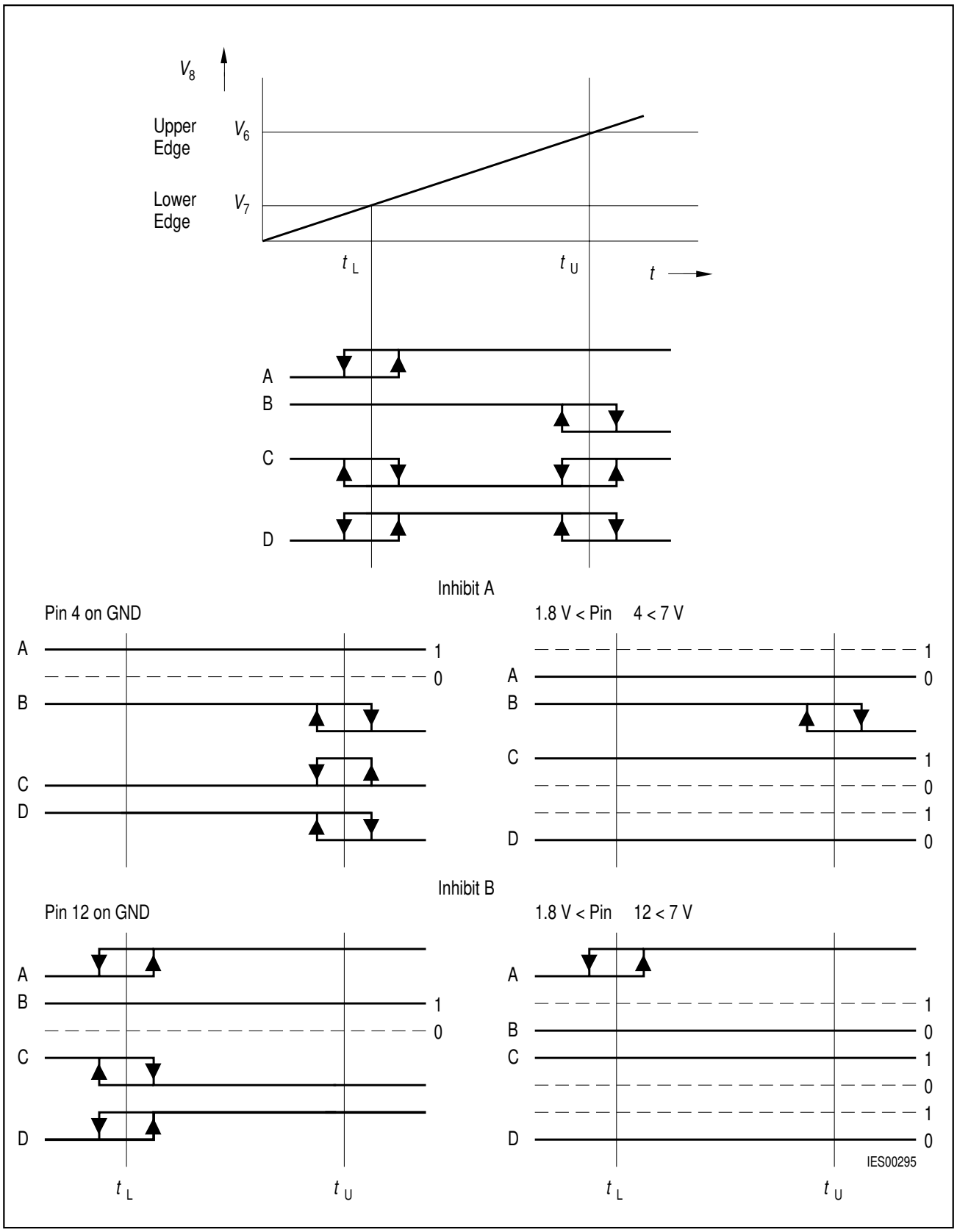

Application Circuit 1
Direct Setting of Lower and Upper Edge Voltages

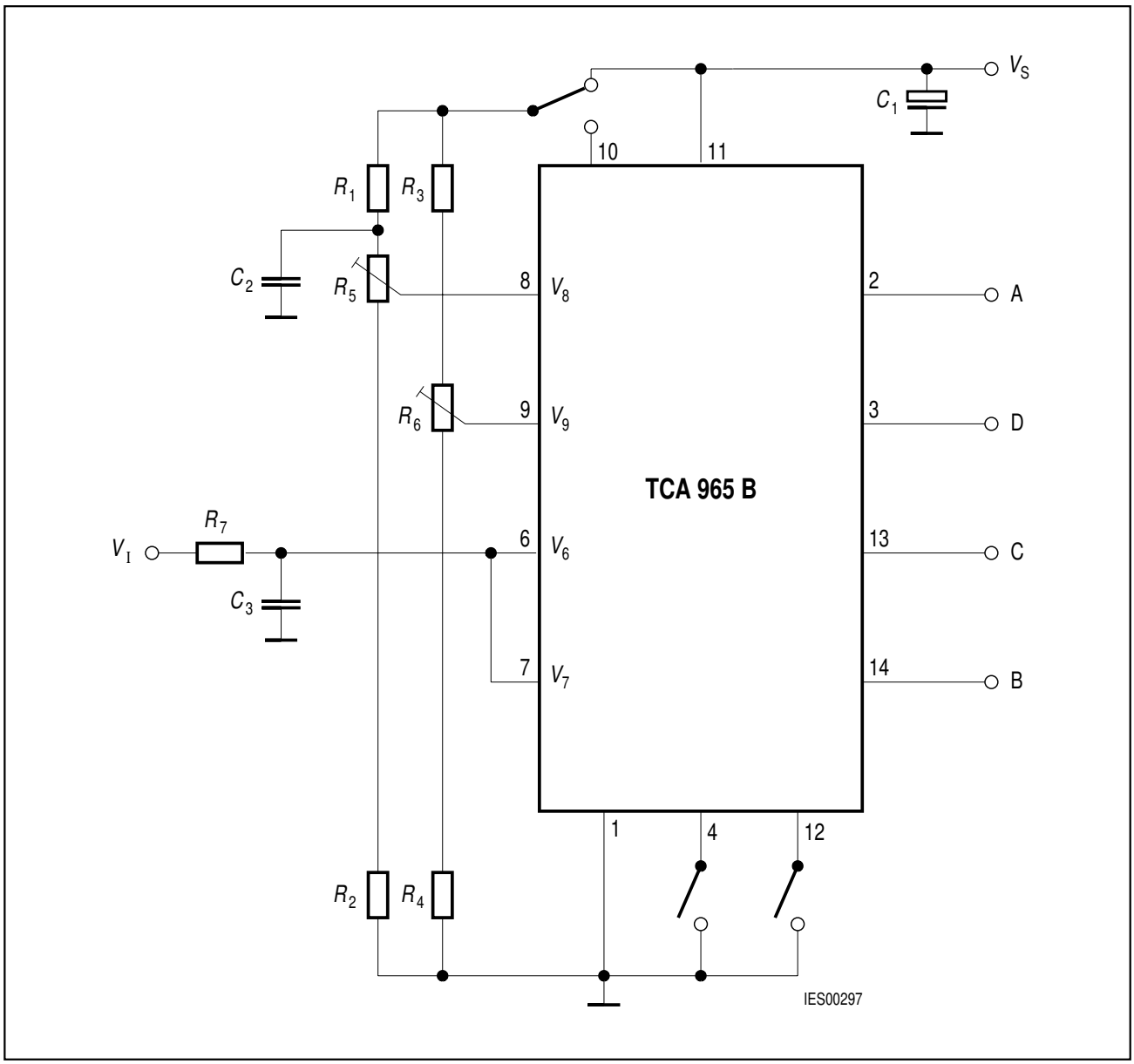

Application Circuit 2
Indirect Setting of Window by Center Voltage and Half-Window Width V

$V_6 = V_7 =$ Input voltage
$V_8 =$ Center voltage
$V_9 =$ Half window width

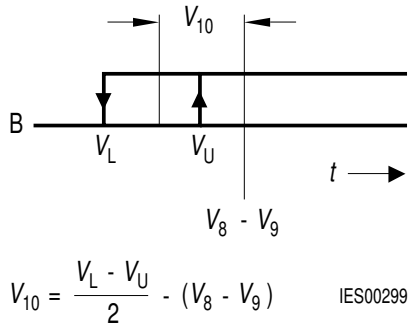

Definition of the Offset Voltage V_{IO}

$$V_{10} = \frac{V_L + V_U}{2} - (V_8 - V_9)$$

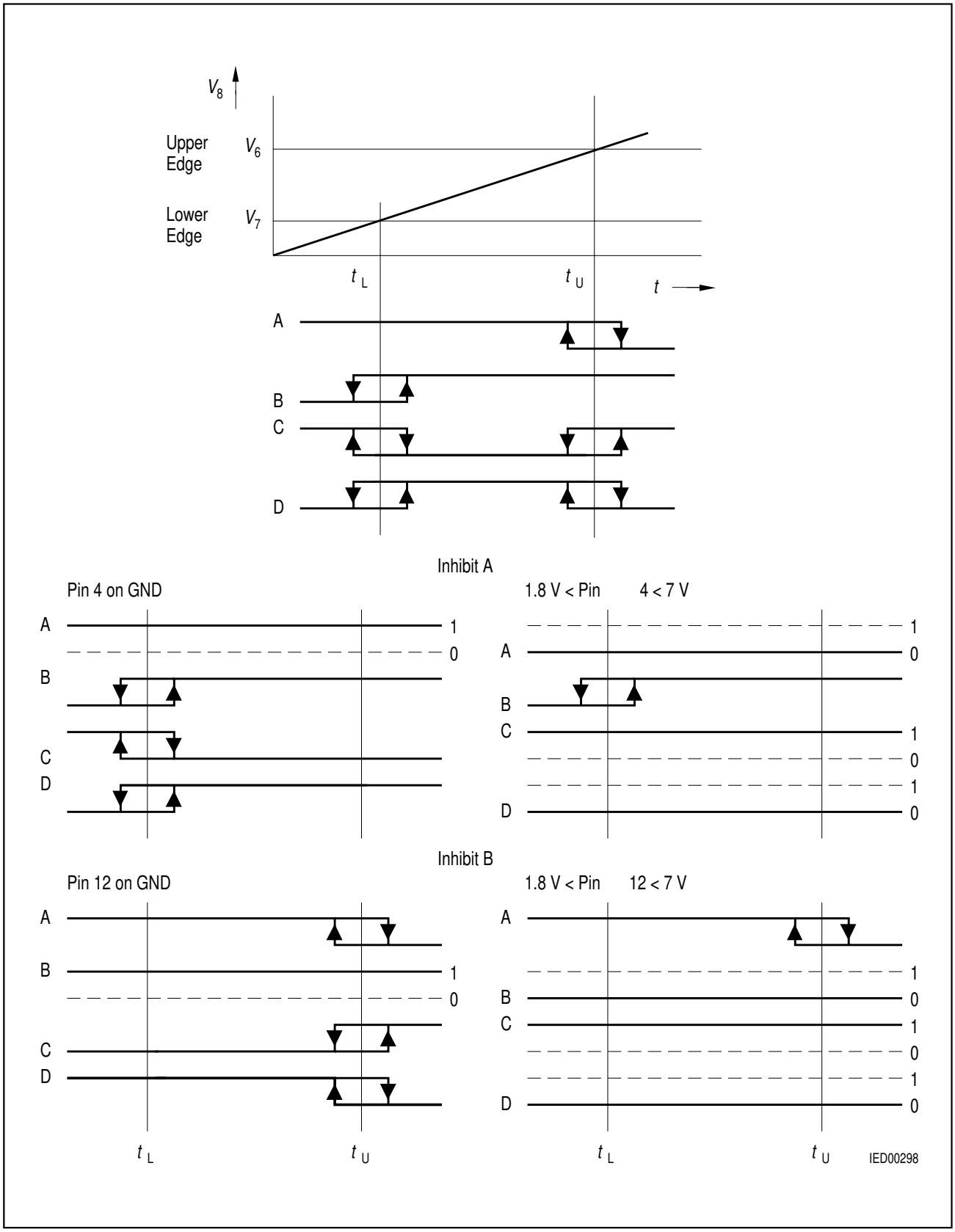

Application Circuit 2
Indirect Setting of Window by Center Voltage and Half-Window Width V

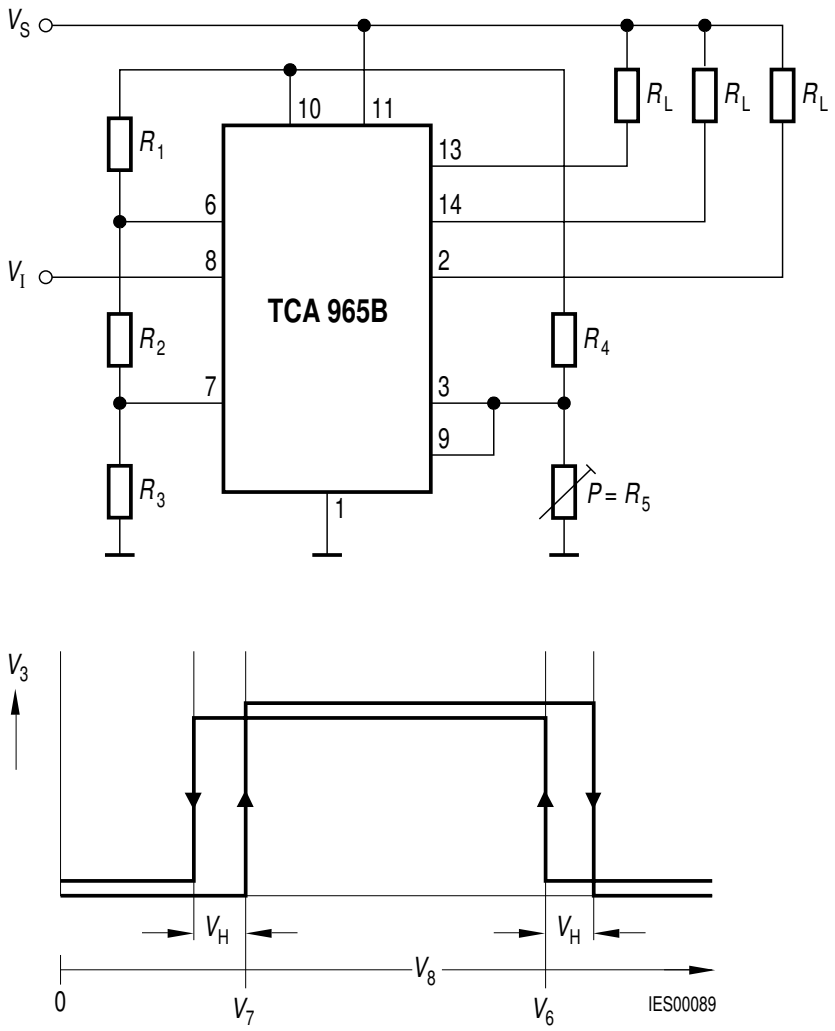

Application Circuit 3
Symmetrically Enlarged Edge Hysteresis in Direct Setting of Window

Calculation of Hysteresis V_H

$$V_H = V_{10}\frac{R_5}{R_4 + R_5}$$

$$\frac{V_{10}}{R_4 + R_5} + \frac{V_{10}}{R_1 + R_2 + R_3} \leq 10\ \text{mA}$$

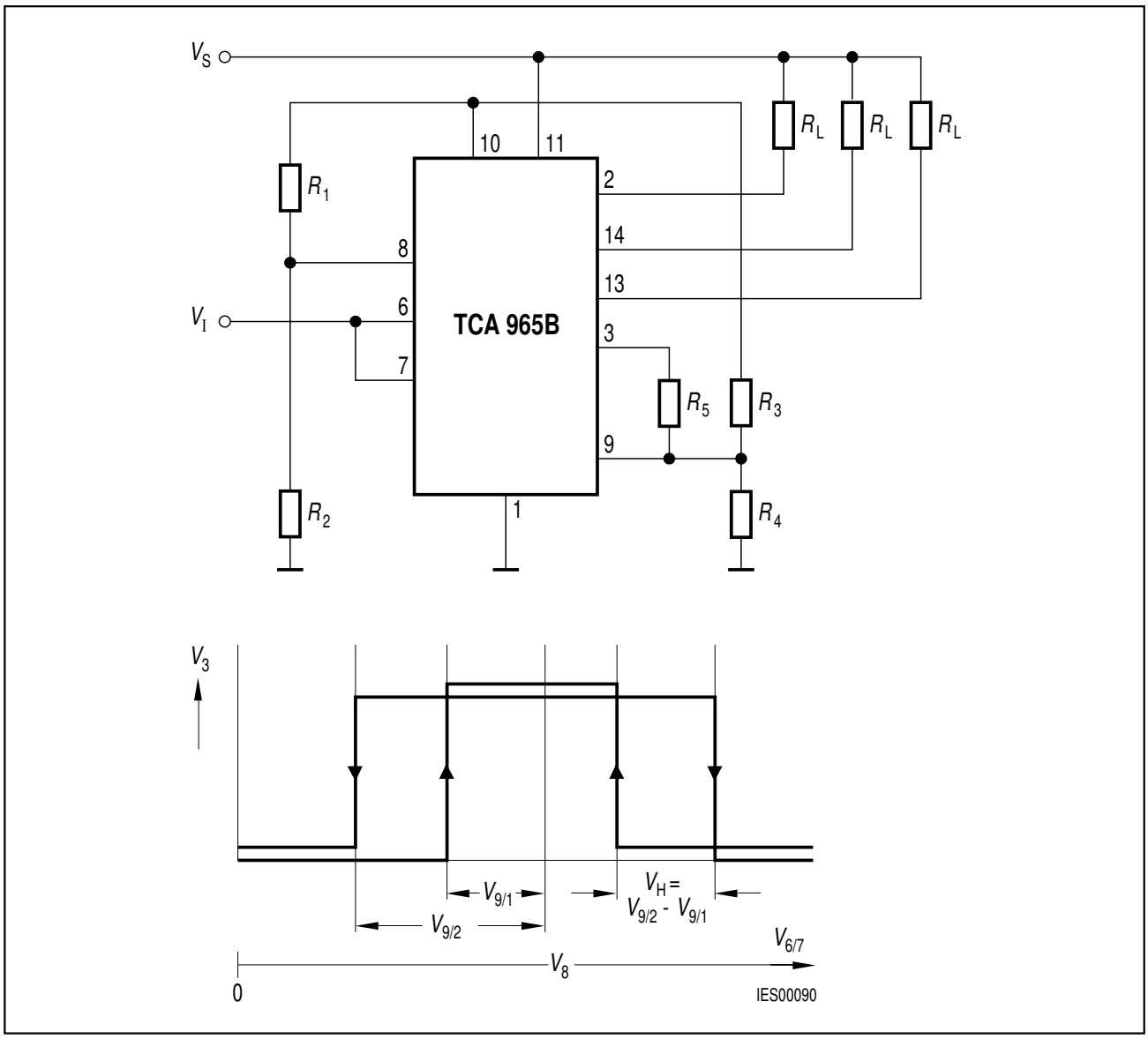

Application Circuit 4
Symmetrically Enlarged Edge Hysteresis in Indirect Setting of Window

Calculation of Hysteresis V_H

$$V_H = V_{9/2} - V_{9/1}$$

$$V_{9/1} = V_{10}\frac{R_4 \parallel R_5}{R_3 + R_4 \parallel R_5}$$

$$V_{9/2} = V_{10}\frac{R_4}{R_3 + R_4}$$

PG-DIP-14-1
(Plastic Dual In-line Package)

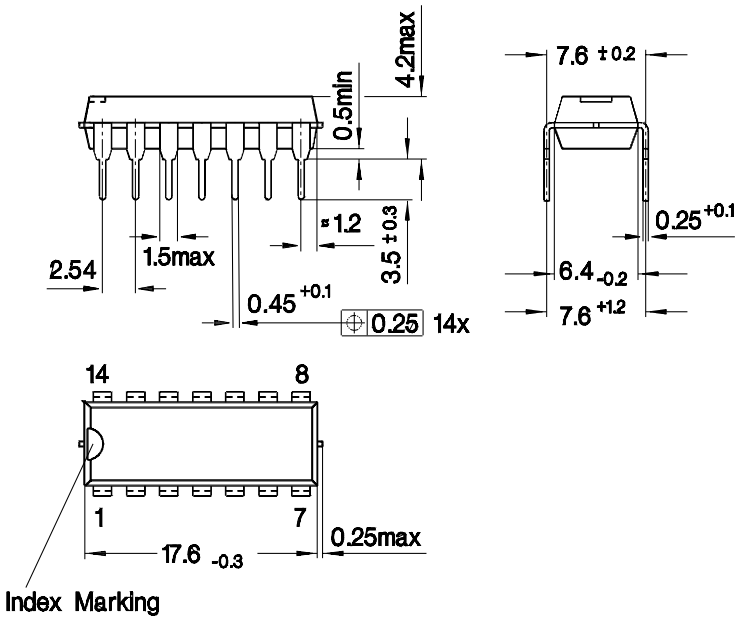

GPD05005

Sorts of Packing
Package outlines for tubes, trays etc. are contained in our Data Book “Package Information”.

Dimensions in mm