Chipsmall Limited consists of a professional team with an average of over 10 year of expertise in the distribution of electronic components. Based in Hongkong, we have already established firm and mutual-benefit business relationships with customers from,Europe,America and south Asia,supplying obsolete and hard-to-find components to meet their specific needs.

With the principle of “Quality Parts,Customers Priority,Honest Operation,and Considerate Service”,our business mainly focus on the distribution of electronic components. Line cards we deal with include Microchip,ALPS,ROHM,Xilinx,Pulse,ON,Everlight and Freescale. Main products comprise IC,Modules,Potentiometer,IC Socket,Relay,Connector.Our parts cover such applications as commercial,industrial, and automotives areas.

We are looking forward to setting up business relationship with you and hope to provide you with the best service and solution. Let us make a better world for our industry!

Contact us

Tel: +86-755-8981 8866 Fax: +86-755-8427 6832
Email & Skype: info@chipsmall.com Web: www.chipsmall.com
Address: A1208, Overseas Decoration Building, #122 Zhenhua RD., Futian, Shenzhen, China

DATA SHEET

TEA6324T
Sound control circuit

Preliminary specification
File under Integrated Circuits, IC01

1997 Mar 13

Philips
Semiconductors

PHILIPS

Sound control circuit TEA6324T

FEATURES

- Source selector for two stereo and one mono inputs
- Interface for noise reduction circuits
- Interface for external equalizer
- Volume and balance control
- Bass control with equalizer filters
- Treble control
- Mute control at audio signal zero crossing
- Fast mute control via I²C-bus
- Fast mute control via pin
- I²C-bus control for all functions
- Power supply with internal power-on reset.

GENERAL DESCRIPTION

The sound control circuit TEA6324T is an I²C-bus controlled stereo preamplifier for car radio hi-fi sound applications.

QUICK REFERENCE DATA

SYMBOL	PARAMETER	CONDITIONS	MIN.	TYP.	MAX.	UNIT
V_{CC}	supply voltage		7.5	8.5	9.5	V
I_{CC}	supply current	V_{CC} = 8.5 V	–	26	–	mA
$V_{o(rms)}$	maximum output voltage level	V_{CC} = 8.5 V; THD ≤ 0.1%	–	2000	–	mV
G_v	voltage gain		–86	–	+20	dB
$G_{step(vol)}$	step resolution (volume)		–	1	–	dB
G_{bass}	bass control		–18	–	+18	dB
G_{treble}	treble control		–12	–	+12	dB
$G_{step(treble)}$	step resolution (treble)		–	1.5	–	dB
(S+N)/N	signal-plus-noise to noise ratio	V_o = 2.0 V; G_v = 0 dB; unweighted	–	105	–	dB
RR_{100}	ripple rejection	$V_{r(rms)}$ < 200 mV; f = 100 Hz; G_v = 0 dB	–	75	–	dB
α_{cs}	channel separation	250 Hz ≤ f ≤ 10 kHz; G_v = 0 dB	90	96	–	dB

ORDERING INFORMATION

TYPE NUMBER	PACKAGE		
	NAME	DESCRIPTION	VERSION
TEA6324T	SO24	plastic small outline package; 24 leads; body width 7.5 mm	SOT137-1

BLOCK DIAGRAM

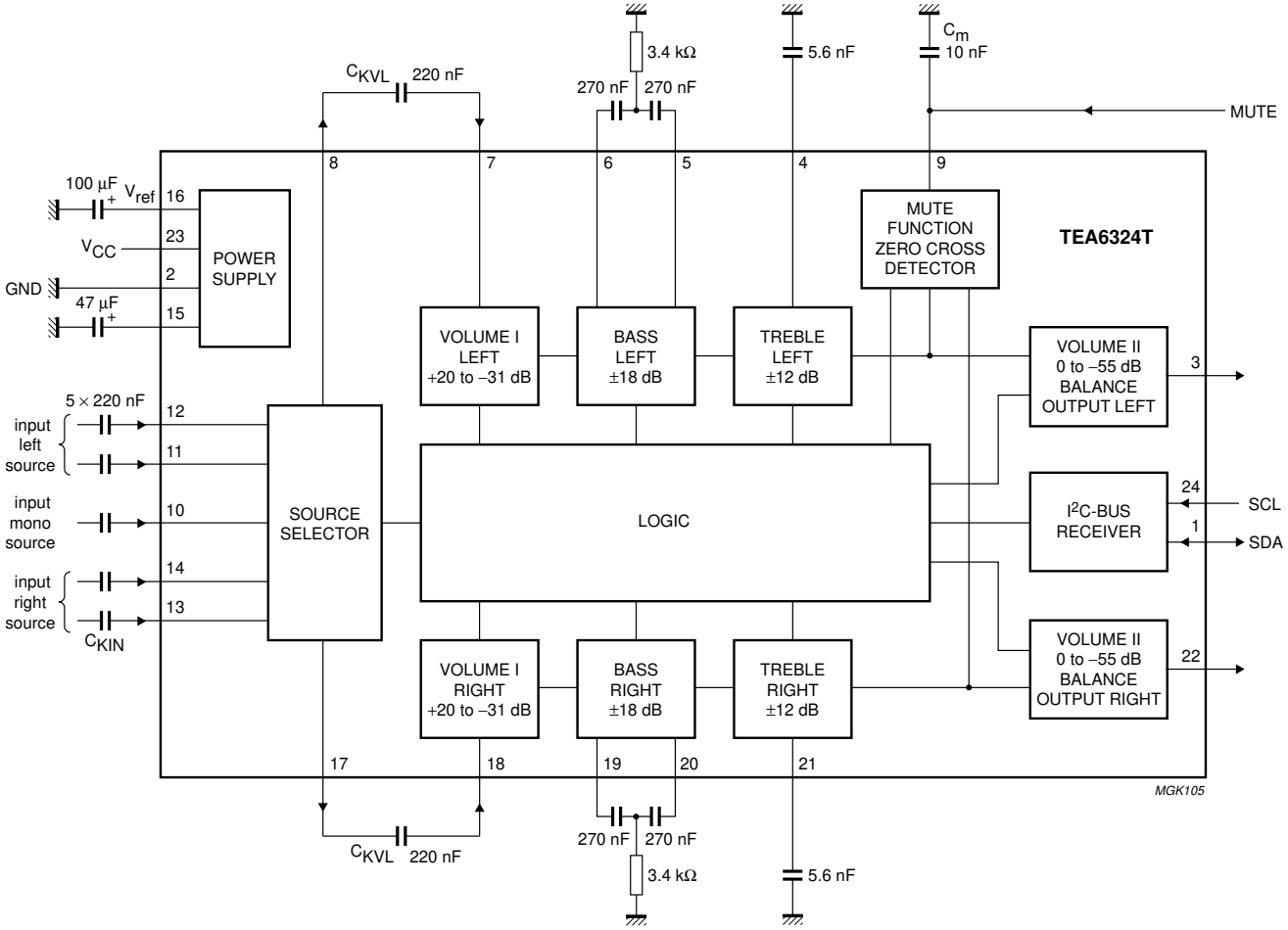

Fig.1 Block diagram.

PINNING

SYMBOL	PIN	DESCRIPTION
SDA	1	serial data input/output (I^2C-bus)
GND	2	ground
OUTL	3	output left
TL	4	treble control capacitor left channel or input from an external equalizer
B2L	5	bass control left channel or output to an external equalizer
B1L	6	bass control, left channel
IVL	7	input volume I, left control part
QSL	8	output source selector, left channel
MUTE	9	mute control
IMO	10	input mono source
IBL	11	input B left source
IAL	12	input A left source
IAR	13	input A right source
IBR	14	input B right source
CAP	15	electronic filtering for supply
V_{ref}	16	reference voltage ($0.5V_{CC}$)
QSR	17	output source selector right channel
IVR	18	input volume I, right control part
B1R	19	bass control right channel
B2R	20	bass control right channel or output to an external equalizer
TR	21	treble control capacitor right channel or input from an external equalizer
OUTR	22	output right
V_{CC}	23	supply voltage
SCL	24	serial clock input (I^2C-bus)

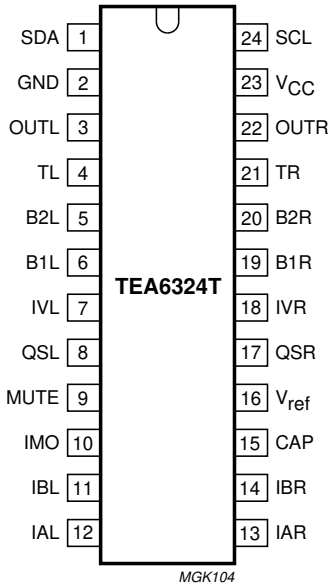

Fig.2 Pin configuration.

FUNCTIONAL DESCRIPTION

The source selector selects one of 2 stereo inputs or the mono input. The maximum input signal voltage is $V_{i(rms)}$ = 2 V. The outputs of the source selector and the inputs of the following volume control parts are available at pins 7 and 8 for the left channel and pins 17 and 18 for the right channel. This offers the possibility of interfacing a noise reduction system.

The volume control function is split into two sections: volume I control block and volume II control block.

The control range of volume I is between +20 dB and −31 dB in steps of 1 dB. The volume II control range is between 0 dB and −55 dB in steps of 1 dB.
The recommended control range to be used is 86 dB (+20 to −66 dB) although in theory, a range of 106 dB (+20 to −86 dB) can be attained. The gain/attenuation setting of the volume I control block is common for both channels.

The volume I control block is followed by the bass control block. The frequency response of the bass control (see Fig.3) is provided for each channel by an external filter in combination with internal resistors. The adjustable range is between −18 and +18 dB in steps of 1.8 dB at 46 Hz.

The treble control block offers a control range between −12 and +12 dB in steps of 1.5 dB at 15 kHz. The filter characteristic is determined by a single capacitor of 5.6 nF for each channel in combination with internal resistors (see Fig.4).

The basic step width of treble control is 3 dB.
The intermediate steps are obtained by switching 1.5 dB boost and 1.5 dB attenuation steps.

The bass and treble control functions can be switched off via I²C-bus. In this event the internal signal flow is disconnected. The connections B2L and B2R are outputs and TL and TR are inputs for inserting an external equalizer.

The last section of the circuit is the volume II block.
The balance function uses the same control block. This is achieved by 2 independently controllable attenuators, one for each output. The control range of these attenuators is 55 dB in steps of 1 dB with an additional mute step.

The circuit provides 3 mute modes:

1. Zero crossing mode mute via I²C-bus using 2 independent zero crossing detectors (ZCM, see Tables 2 and 8 and Fig.15)
2. Fast mute via MUTE pin (see Fig.9)
3. Fast mute via I²C-bus either by general mute (GMU, see Tables 2 and 8) or volume II block setting (see Table 4).

The mute function is performed immediately if ZCM is cleared (ZCM = 0). If the bit is set (ZCM = 1) the mute is activated after changing the GMU bit. The actual mute switching is delayed until the next zero crossing of the audio frequency signal. Two comparators are built-in to provide independent mute switches to control each of the audio channels (left and right).

To avoid a large delay of mute switching when very low frequencies are processed, the maximum delay time is limited to typically 100 ms by an integrated timing circuit and an external capacitor (C_m = 10 nF, see Fig.9). This timing circuit is triggered by reception of a new data word for the switch function which includes the GMU bit. After a discharge and charge period of an external capacitor the muting switch follows the GMU bit, only if no zero crossing was detected during that time.

The mute function can also be controlled externally (see Fig.9). If the mute pin is switched to ground all outputs are muted immediately (hardware mute). This mute request overwrites all mute controls via the I²C-bus for the time the pin is held LOW. The hardware mute position is not stored in the TEA6324T.

Typically, the turn on/off can be used to avoid AF output. This can be caused by the input signal from preceding stages, which may produce output during a drop of V_{CC}. To avoid this, the mute must be set prior to a V_{CC} drop and can be achieved either by I²C-bus control, or by grounding the MUTE pin.

In cases where there is no mute in the application before turn off, a supply voltage drop of more than $1 \times V_{BE}$ will result in a mute during the voltage drop.

The power supply should include a V_{CC} buffer capacitor, which provides a discharging time constant. If the input signal does not disappear after turn off the input will become audible after a certain time. A 4.7 kΩ resistor discharges the V_{CC} buffer capacitor, because the internal current of the IC does not discharge it completely.

The hardware mute function is ideal for use in Radio Data System (RDS) applications. The zero crossing mute avoids modulation plops. This feature is an advantage for mute during changing presets and/or sources (e.g. traffic announcement during cassette playback).

LIMITING VALUES

In accordance with the Absolute Maximum Rating System (IEC 134).

SYMBOL	PARAMETER	CONDITIONS	MIN.	MAX.	UNIT
V_{CC}	supply voltage		0	10	V
V_n	voltage at all pins relative to pin 2		0	V_{CC}	V
T_{amb}	operating ambient temperature		−40	+85	°C
T_{stg}	storage temperature		−65	+150	°C
V_{es}	electrostatic handling	note 1	−	−	

Note

1. Human body model: C = 100 pF; R = 1.5 kΩ; V ≥ 2 kV. Machine model: C = 200 pF; R = 0 Ω; V ≥ 500 V.

CHARACTERISTICS

V_{CC} = 8.5 V; R_S = 600 Ω; R_L = 10 kΩ; C_L = 2.5 nF; AC coupled; f = 1 kHz; T_{amb} = 25 °C; gain control G_v = 0 dB; bass linear; treble linear; balance in mid position; unless otherwise specified.

SYMBOL	PARAMETER	CONDITIONS	MIN.	TYP.	MAX.	UNIT
V_{CC}	supply voltage		7.5	8.5	9.5	V
I_{CC}	supply current		–	26	33	mA
V_{DC}	internal DC voltage at inputs and outputs		3.83	4.25	4.68	V
V_{ref}	internal reference voltage at pin 16		–	4.25	–	V
$G_{v(max)}$	maximum voltage gain	R_S = 0 Ω; R_L = ∞	19	20	21	dB
$V_{o(rms)}$	output voltage level (RMS value) for P_{max} at the power output stage start of clipping	THD ≤ 0.1%; see Fig.10	–	2000	–	mV
		THD = 1%	2300	–	–	mV
		R_L = 2 kΩ; C_L = 10 nF; THD = 1%	2000	–	–	mV
$V_{i(rms)}$	input sensitivity	V_o = 2000 mV; G_v = 20 dB	–	200	–	mV
f_{ro}	roll-off frequency	C_{KIN} = 220 nF; C_{KVL} = 220 nF; $Z_i = Z_{i(min)}$				
		low frequency (–1 dB)	60	–	–	Hz
		low frequency (–3 dB)	30	–	–	Hz
		high frequency (–1 dB)	20000	–	–	Hz
		C_{KIN} = 470 nF; C_{KVL} = 100 nF; $Z_i = Z_{i(typ)}$ low frequency (–3 dB)	17	–	–	Hz
α_{cs}	channel separation	V_i = 2 V; frequency range 250 Hz to 10 kHz	90	96	–	dB
THD	total harmonic distortion	frequency range 20 Hz to 12.5 kHz				
		V_i = 100 mV; G_v = 20 dB	–	0.1	–	%
		V_i = 1 V; G_v = 0 dB	–	0.05	0.15	%
		V_i = 2 V; G_v = 0 dB	–	0.1	–	%
		V_i = 2 V; G_v = –10 dB	–	0.1	–	%
RR	ripple rejection	$V_{r(rms)}$ < 200 mV				
		f = 100 Hz	70	76	–	dB
		f = 40 Hz to 12.5 kHz	–	66	–	dB
(S+N)/N	signal-plus-noise to noise ratio	unweighted; 20 Hz to 20 kHz RMS; V_o = 2.0 V; see Figs 5 and 6	–	105	–	dB
		CCIR468-2 weighted; quasi peak; V_o = 2.0 V				
		G_v = 0 dB	–	95	–	dB
		G_v = 12 dB	–	88	–	dB
		G_v = 20 dB	–	81	–	dB

SYMBOL	PARAMETER	CONDITIONS	MIN.	TYP.	MAX.	UNIT
$P_{no(rms)}$	noise output power (RMS value) only contribution of TEA6324T; power amplifier for 6 W	mute position; note 1	–	–	10	nW
α_{ct}	crosstalk between bus inputs and signal outputs $\left(20 \log \frac{V_{bus(p-p)}}{V_{o(rms)}}\right)$	note 2	–	110	–	dB
Source selector						
Z_i	input impedance		25	35	45	kΩ
α_S	input isolation of one selected source to any other input	f = 1 kHz	–	105	–	dB
		f = 12.5 kHz	–	95	–	dB
$V_{i(rms)}$	maximum input voltage (RMS value)	THD < 0.5%; V_{CC} = 8.5 V	–	2.15	–	V
		THD < 0.5%; V_{CC} = 7.5 V	–	1.8	–	V
V_{offset}	DC offset voltage at source selector output by selection of any inputs		–	–	10	mV
Z_o	output impedance		–	80	120	Ω
R_L	output load resistance		10	–	–	kΩ
C_L	output load capacity		0	–	2500	pF
G_v	voltage gain, source selector		–	0	–	dB
Control part (source selector disconnected; source resistance 600 Ω)						
Z_i	input impedance volume input		100	150	200	kΩ
Z_o	output impedance		–	80	120	Ω
R_L	output load resistance		2	–	–	kΩ
C_L	output load capacity		0	–	10	nF
R_{DCL}	DC load resistance at output to ground		4.7	–	–	kΩ
$V_{i(rms)}$	maximum input voltage (RMS value)	THD < 0.5%	–	2.15	–	V
$V_{n(o)}$	noise output voltage	CCIR468-2 weighted; quasi peak				
		G_v = 20 dB	–	110	220	μV
		G_v = 0 dB	–	33	50	μV
		G_v = –66 dB	–	13	22	μV
		mute position	–	10	–	μV
CR_{tot}	total continuous control range		–	106	–	dB
	recommended control range		–	86	–	dB
G_{step}	step resolution		–	1	–	dB
	step error between any adjoining step		–	–	0.5	dB
ΔG_a	attenuator set error	G_v = +20 to –50 dB	–	–	2	dB
		G_v = –51 to –66 dB	–	–	3	dB
ΔG_t	gain tracking error	G_v = +20 to –50 dB	–	–	2	dB
α_{mute}	mute attenuation	see Fig.9	100	110	–	dB

SYMBOL	PARAMETER	CONDITIONS	MIN.	TYP.	MAX.	UNIT
V_{offset}	DC step offset between any adjoining step	G_v = 0 to –66 dB	–	0.2	10	mV
		G_v = 20 to 0 dB	–	2	15	mV
	DC step offset between any step to mute	G_v = 0 to –66 dB	–	–	10	mV
Volume I control						
$CR_{tot(vol)1}$	continuous volume control range		–	51	–	dB
G_v	voltage gain		–31	–	+20	dB
G_{step}	step resolution		–	1	–	dB
Bass control						
G_{bass}	bass control, maximum boost	f = 46 Hz	16	18	19	dB
	maximum attenuation	f = 46 Hz	16	18	19	dB
G_{step}	step resolution (toggle switching)	f = 46 Hz	–	1.8	–	dB
	step error between any adjoining step	f = 46 Hz	–	–	0.5	dB
V_{offset}	DC step offset in any bass position		–	–	25	mV
Treble control						
G_{treble}	treble control, maximum boost	f = 15 kHz	11	12	13	dB
	maximum attenuation	f = 15 kHz	11	12	13	dB
	maximum boost	f > 15 kHz	–	–	15	dB
G_{step}	step resolution (toggle switching)	f = 15 kHz	–	1.5	–	dB
	step error between any adjoining step	f = 15 kHz	–	–	0.5	dB
V_{offset}	DC step offset in any treble position		–	–	10	mV
Volume II and balance control						
$CR_{tot(vol)2}$	continuous attenuation of volume control range		53.5	55	56.5	dB
G_{step}	step resolution		–	1	2	dB
	attenuation set error		–	–	1.5	dB
Mute function (see Fig.9)						
HARDWARE MUTE						
V_{sw}	mute switch level ($2 \times V_{BE}$)		–	1.45	–	V
mute active						
V_{swLOW}	input level		–	–	1.0	V
I_i	input current	V_{swLOW} = 1 V	–300	–	–	μA
mute passive: level internally defined						
V_{swHIGH}	saturation voltage		–	–	V_{CC}	V
$t_{d(mute)}$	delay until mute passive		–	–	0.5	ms
ZERO CROSSING MUTE						
I_{dch}	discharge current		0.3	0.6	1.2	μA
I_{ch}	charge current		–300	–150	–	μA
V_{swDEL}	delay switch level ($3 \times V_{BE}$)		–	2.2	–	V

SYMBOL	PARAMETER	CONDITIONS	MIN.	TYP.	MAX.	UNIT
t_d	delay time	C_m = 10 nF	–	100	–	ms
$V_{(w)}$	window for audio signal zero crossing detection		–	30	40	mV
Muting at power supply drop						
V_{CCdrop}	supply drop for mute active		–	V_{23} – 0.7	–	V
Power-on reset when reset is active the GMU-bit (general mute) is set and the I²C-bus receiver is in reset position						
V_{CC}	increasing supply voltage start of reset		–	–	2.5	V
	end of reset		5.2	6.5	7.2	V
	decreasing supply voltage start of reset		4.2	5.5	6.2	V
Digital part (I²C-bus pins); note 3						
V_{IH}	HIGH-level input voltage		3	–	9.5	V
V_{IL}	LOW-level input voltage		–0.3	–	+1.5	V
I_{IH}	HIGH-level input current		–10	–	+10	μA
I_{IL}	LOW-level input current		–10	–	+10	μA
V_{OL}	LOW-level output voltage	I_L = 3 mA	–	–	0.4	V

Notes to the characteristics

1. The indicated values for output power assume a 6 W power amplifier at 4 Ω with 20 dB gain and a fixed attenuator of 12 dB in front of it. Signal-to-noise ratios exclude noise contribution of the power amplifier.
2. The transmission contains: total initialization with MAD and subaddress for volume and 8 data words, see also definition of characteristics, clock frequency = 50 kHz, repetition burst rate = 400 Hz, maximum bus signal amplitude = 5 V (p-p).
3. The AC characteristics are in accordance with the I²C-bus specification. This specification, *"The I²C-bus and how to use it"*, can be ordered using the code 9398 393 40011.

I²C-BUS PROTOCOL

I²C-bus format

S[1]	SLAVE ADDRESS[2]	A[3]	SUBADDRESS[4]	A[3]	DATA[5]	A[3]	P[6]

Notes

1. S = START condition.
2. SLAVE ADDRESS (MAD) = 0101 0000.
3. A = acknowledge, generated by the slave.
4. SUBADDRESS (SAD), see Table 1.
5. DATA, see Table 1.
6. P = STOP condition.

Table 1 Second byte after MAD

FUNCTION	BIT	MSB							LSB
		7	6	5	4	3	2[1]	1[1]	0[1]
Volume	V	0	0	0	0	0	0	0	0
Output right	OUTR	0	0	0	0	0	0	0	1
Output left	OUTL	0	0	0	0	0	0	1	0
No function	–	0	0	0	0	0	0	1	1
No function	–	0	0	0	0	0	1	0	0
Bass	BA	0	0	0	0	0	1	0	1
Treble	TR	0	0	0	0	0	1	1	0
Switch	S	0	0	0	0	0	1	1	1

Note

1. Significant subaddress.

Table 2 Definition of third byte after MAD and SAD

FUNCTION	BIT	MSB							LSB
		7	6	5	4	3	2	1	0
Volume	V	ZCM[1]	1	V5[2]	V4[2]	V3[2]	V2[2]	V1[2]	V0[2]
Output right	OUTR	X[3]	X[3]	OUTR5[4]	OUTR4[4]	OUTR3[4]	OUTR2[4]	OUTR1[4]	OUTR0[4]
Output left	OUTL	X[3]	X[3]	OUTL5[5]	OUTL4[5]	OUTL3[5]	OUTL2[5]	OUTL1[5]	OUTL0[5]
No function	–	X[3]	X[3]	X[3]	X[3]	X[3]	X[3]	X[3]	X[3]
No function	–	X[3]	X[3]	X[3]	X[3]	X[3]	X[3]	X[3]	X[3]
Bass	BA	X[3]	X[3]	X[3]	BA4[6]	BA3[6]	BA2[6]	BA1[6]	BA0[6]
Treble	TR	X[3]	X[3]	X[3]	TR4[7]	TR3[7]	TR2[7]	TR1[7]	TR0[7]
Switch	S	GMU[8]	X[3]	X[3]	X[3]	X[3]	SC2[9]	SC1[9]	SC0[9]

Notes

1. Zero crossing mode.
2. Volume control.
3. Don’t care bits (logic 1 during testing).
4. Output right.
5. Output left.
6. Bass control.
7. Treble control.
8. Mute control for all outputs (general mute).
9. Source selector control.

Table 3 Volume I setting

G_v (dB)	DATA					
	V5	V4	V3	V2	V1	V0
+20	1	1	1	1	1	1
+19	1	1	1	1	1	0
+18	1	1	1	1	0	1
+17	1	1	1	1	0	0
+16	1	1	1	0	1	1
+15	1	1	1	0	1	0
+14	1	1	1	0	0	1
+13	1	1	1	0	0	0
+12	1	1	0	1	1	1
+11	1	1	0	1	1	0
+10	1	1	0	1	0	1
+9	1	1	0	1	0	0
+8	1	1	0	0	1	1
+7	1	1	0	0	1	0
+6	1	1	0	0	0	1
+5	1	1	0	0	0	0
+4	1	0	1	1	1	1
+3	1	0	1	1	1	0
+2	1	0	1	1	0	1
+1	1	0	1	1	0	0
0	1	0	1	0	1	1
−1	1	0	1	0	1	0
−2	1	0	1	0	0	1
−3	1	0	1	0	0	0
−4	1	0	0	1	1	1
−5	1	0	0	1	1	0
−6	1	0	0	1	0	1
−7	1	0	0	1	0	0
−8	1	0	0	0	1	1
−9	1	0	0	0	1	0
−10	1	0	0	0	0	1
−11	1	0	0	0	0	0
−12	0	1	1	1	1	1
−13	0	1	1	1	1	0
−14	0	1	1	1	0	1
−15	0	1	1	1	0	0
−16	0	1	1	0	1	1
−17	0	1	1	0	1	0

G_v (dB)	DATA					
	V5	V4	V3	V2	V1	V0
–18	0	1	1	0	0	1
–19	0	1	1	0	0	0
–20	0	1	0	1	1	1
–21	0	1	0	1	1	0
–22	0	1	0	1	0	1
–23	0	1	0	1	0	0
–24	0	1	0	0	1	1
–25	0	1	0	0	1	0
–26	0	1	0	0	0	1
–27	0	1	0	0	0	0
–28	0	0	1	1	1	1
–29	0	0	1	1	1	0
–30	0	0	1	1	0	1
–31	0	0	1	1	0	0
Repetition of steps in a range from –28 dB to –31 dB						
–28	0	0	1	0	1	1
–29	0	0	1	0	1	0
–30	0	0	1	0	0	1
–31	0	0	1	0	0	0
–28	0	0	0	1	1	1
–29	0	0	0	1	1	0
–30	0	0	0	1	0	1
–31	0	0	0	1	0	0
–28	0	0	0	0	1	1
–29	0	0	0	0	1	0
–30	0	0	0	0	0	1
–31	0	0	0	0	0	0

Table 4 Volume II setting; note 1

G_v (dB)	DATA					
	OUTL5	OUTL4	OUTL3	OUTL2	OUTL1	OUTL0
	OUTR5	OUTR4	OUTR3	OUTR2	OUTR1	OUTR0
0	1	1	1	1	1	1
–1	1	1	1	1	1	0
–2	1	1	1	1	0	1
–3	1	1	1	1	0	0
–4	1	1	1	0	1	1
–5	1	1	1	0	1	0
–6	1	1	1	0	0	1
–7	1	1	1	0	0	0
–8	1	1	0	1	1	1
–9	1	1	0	1	1	0
–10	1	1	0	1	0	1
–11	1	1	0	1	0	0
–12	1	1	0	0	1	1
–13	1	1	0	0	1	0
–14	1	1	0	0	0	1
–15	1	1	0	0	0	0
–16	1	0	1	1	1	1
–17	1	0	1	1	1	0
–18	1	0	1	1	0	1
–19	1	0	1	1	0	0
–20	1	0	1	0	1	1
–21	1	0	1	0	1	0
–22	1	0	1	0	0	1
–23	1	0	1	0	0	0
–24	1	0	0	1	1	1
–25	1	0	0	1	1	0
–26	1	0	0	1	0	1
–27	1	0	0	1	0	0
–28	1	0	0	0	1	1
–29	1	0	0	0	1	0
–30	1	0	0	0	0	1
–31	1	0	0	0	0	0
–32	0	1	1	1	1	1
–33	0	1	1	1	1	0
–34	0	1	1	1	0	1
–35	0	1	1	1	0	0
–36	0	1	1	0	1	1

G_v (dB)	DATA					
	OUTL5	OUTL4	OUTL3	OUTL2	OUTL1	OUTL0
	OUTR5	OUTR4	OUTR3	OUTR2	OUTR1	OUTR0
–37	0	1	1	0	1	0
–38	0	1	1	0	0	1
–39	0	1	1	0	0	0
–40	0	1	0	1	1	1
–41	0	1	0	1	1	0
–42	0	1	0	1	0	1
–43	0	1	0	1	0	0
–44	0	1	0	0	1	1
–45	0	1	0	0	1	0
–46	0	1	0	0	0	1
–47	0	1	0	0	0	0
–48	0	0	1	1	1	1
–49	0	0	1	1	1	0
–50	0	0	1	1	0	1
–51	0	0	1	1	0	0
–52	0	0	1	0	1	1
–53	0	0	1	0	1	0
–54	0	0	1	0	0	1
–55	0	0	1	0	0	0
Mute	0	0	0	1	1	1
Mute	0	0	0	1	1	0
Mute	0	0	0	1	0	1
Mute	0	0	0	1	0	0
Mute	0	0	0	0	1	1
Mute	0	0	0	0	1	0
Mute	0	0	0	0	0	1
Mute	0	0	0	0	0	0

Note

1. For a particular range the data is always the same, only the subaddress changes.

Table 5 Bass setting

G_{bass} (dB)	DATA				
	BA4	**BA3**	**BA2**	**BA1**	**BA0**
+18.0	1	1	1	1	1
+16.2	1	1	1	1	0
+18.0	1	1	1	0	1
+16.2	1	1	1	0	0
+18.0	1	1	0	1	1
+16.2	1	1	0	1	0
+14.4	1	1	0	0	1
+12.6	1	1	0	0	0
+10.8	1	0	1	1	1
+9.0	1	0	1	1	0
+7.2	1	0	1	0	1
+5.4	1	0	1	0	0
+3.6	1	0	0	1	1
+1.8	1	0	0	1	0
0[1]	1	0	0	0	1
0[2]	1	0	0	0	0
−1.8	0	1	1	1	1
−3.6	0	1	1	1	0
−5.4	0	1	1	0	1
−7.2	0	1	1	0	0
−9.0	0	1	0	1	1
−10.8	0	1	0	1	0
−12.6	0	1	0	0	1
−14.4	0	1	0	0	0
−16.2	0	0	1	1	1
−18.0	0	0	1	1	0
−16.2	0	0	1	0	1
−18.0	0	0	1	0	0
Note 3	0	0	0	1	1
Note 3	0	0	0	1	0
Note 3	0	0	0	0	1
Notes 3 and 4	0	0	0	0	0

Notes

1. Recommended data word for step 0 dB.
2. Result of 1.8 dB boost and 1.8 dB attenuation.
3. The last four bass control data words mute the bass response.
4. The last bass control and treble control data words (00000) enable the external equalizer connection.

Table 6 Treble setting

G_{treble} (dB)	DATA				
	TR4	TR3	TR2	TR1	TR0
+12.0	1	1	1	1	1
+10.5	1	1	1	1	0
+12.0	1	1	1	0	1
+10.5	1	1	1	0	0
+12.0	1	1	0	1	1
+10.5	1	1	0	1	0
+12.0	1	1	0	0	1
+10.5	1	1	0	0	0
+9.0	1	0	1	1	1
+7.5	1	0	1	1	0
+6.0	1	0	1	0	1
+4.5	1	0	1	0	0
+3.0	1	0	0	1	1
+1.5	1	0	0	1	0
0[1]	1	0	0	0	1
0[2]	1	0	0	0	0
−1.5	0	1	1	1	1
−3.0	0	1	1	1	0
−4.5	0	1	1	0	1
−6.0	0	1	1	0	0
−7.5	0	1	0	1	1
−9.0	0	1	0	1	0
−10.5	0	1	0	0	1
−12.0	0	1	0	0	0
Note 3	0	0	1	1	1
Note 3	0	0	1	1	0
Note 3	0	0	1	0	1
Note 3	0	0	1	0	0
Note 3	0	0	0	1	1
Note 3	0	0	0	1	0
Note 3	0	0	0	0	1
Notes 3 and 4	0	0	0	0	0

Notes

1. Recommended data word for step 0 dB.
2. Result of 1.5 dB boost and 1.5 dB attenuation.
3. The last eight treble control data words select treble output.
4. The last treble control and bass control data words (00000) enable the external equalizer connection.

Table 7 Selected input

FUNCTION	DATA		
	SC2	SC1	SC0
Stereo inputs IAL and IAR	1	1	1
Stereo inputs IBL and IBR	1	1	0
No function	1	0	1
No function	1	0	0
Mono input IMO	0	X[1]	X[1]

Note

1. X = don't care bits (logic 1 during testing).

Table 8 Mute mode

FUNCTION	DATA	
	GMU	ZCM
Direct mute off	0	0
Mute off delayed until the next zero crossing	0	1
Direct mute	1	0
Mute delayed until the next zero crossing	1	1

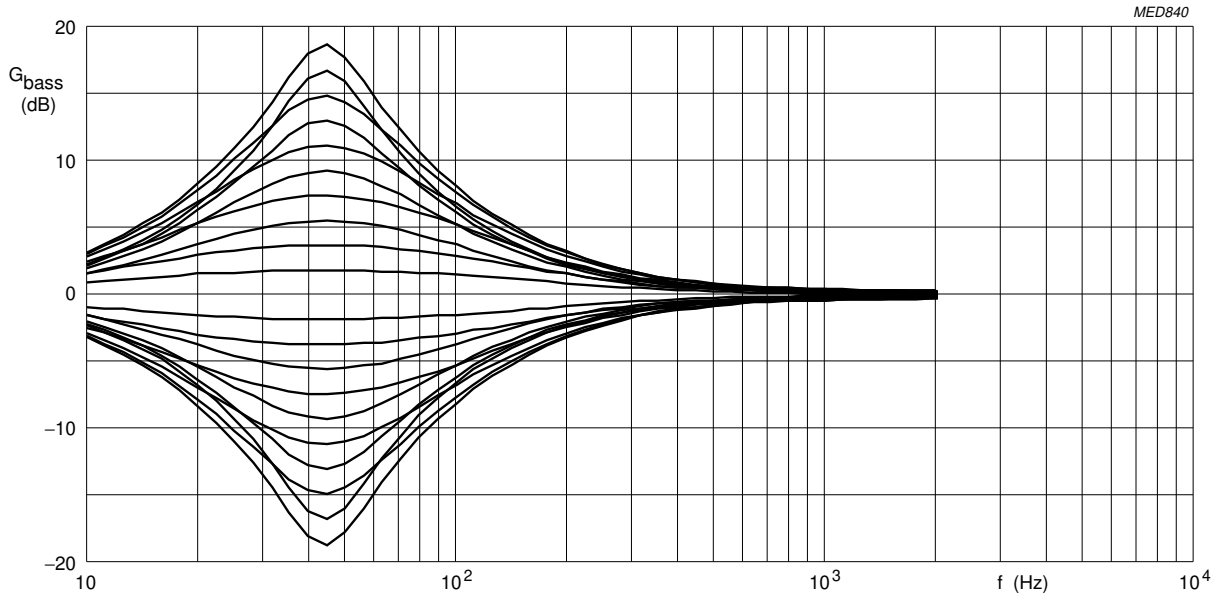

Fig.3 Bass control.

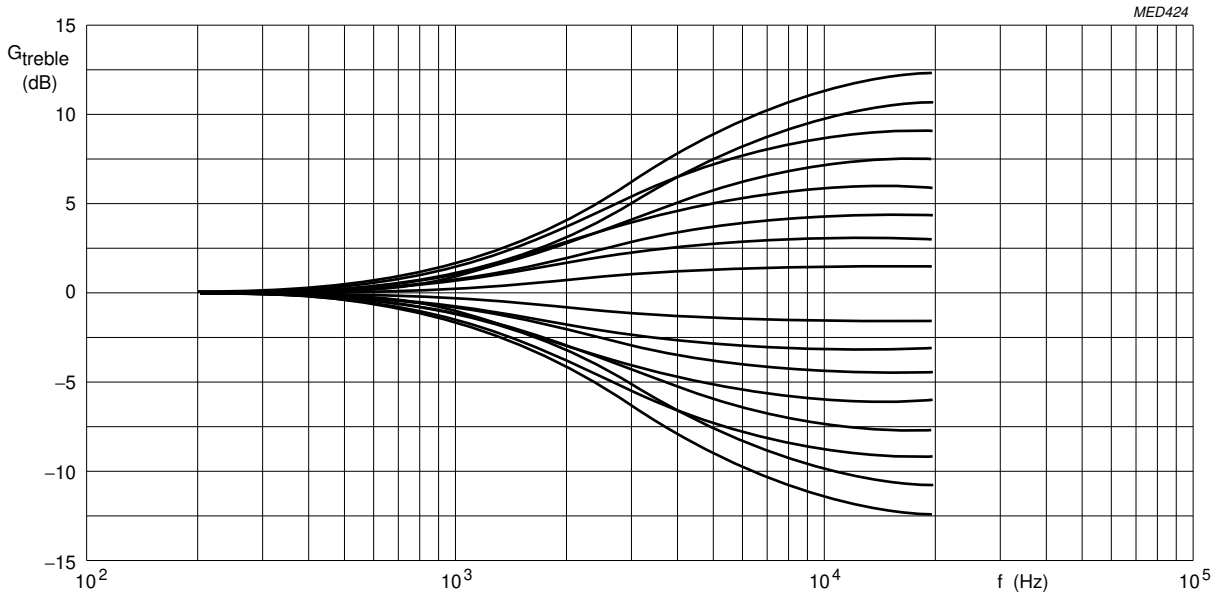

Fig.4 Treble control.

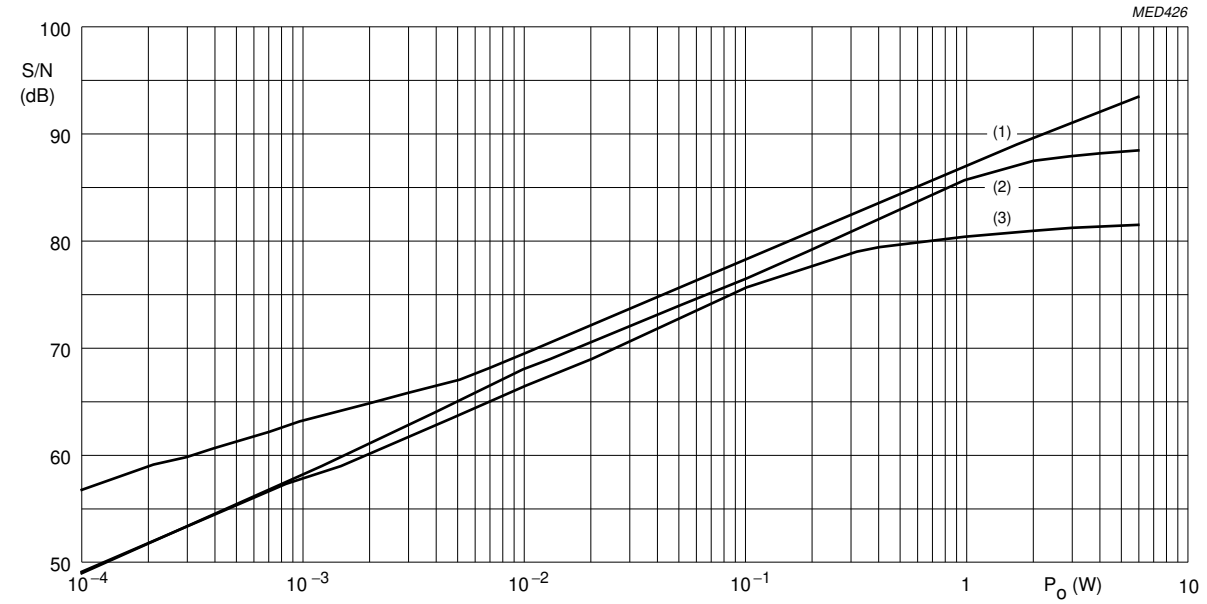

(1) V_i = 2.0 V.
(2) V_i = 0.5 V.
(3) V_i = 0.2 V.

Fig.5 Signal-to-noise ratio; noise weighted: CCIR468-2, quasi peak.

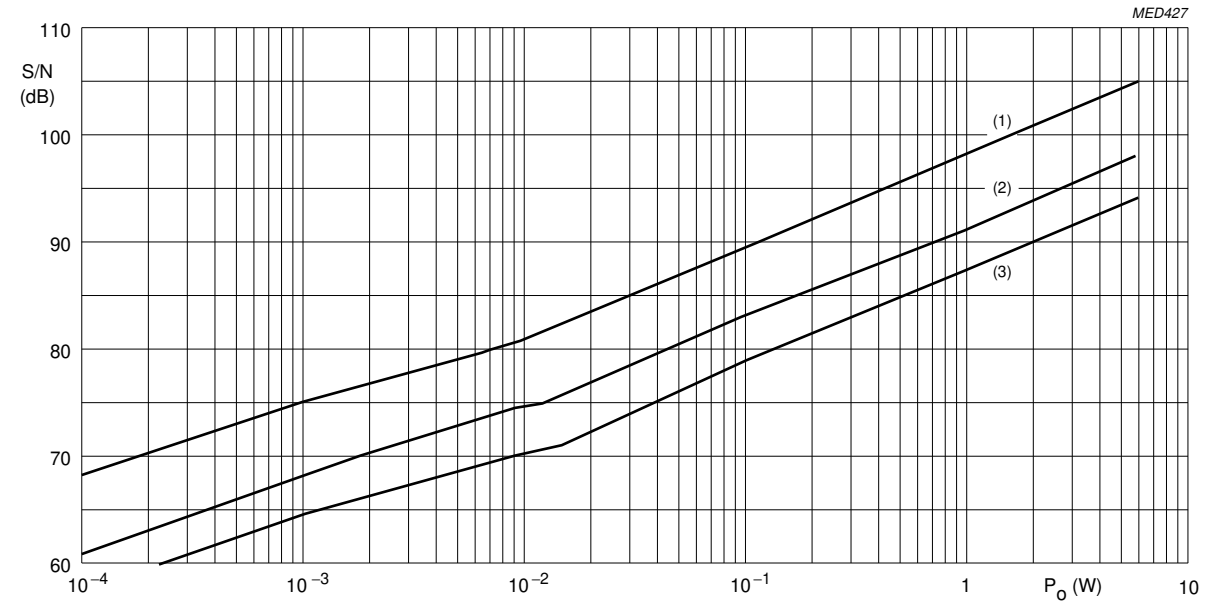

(1) Unweighted RMS.
(2) CCIR468-2 RMS.
(3) CCIR468-2 quasi peak.

Fig.6 Signal-to-noise ratio; V_i = 2 V; P_{max} = 6 W.

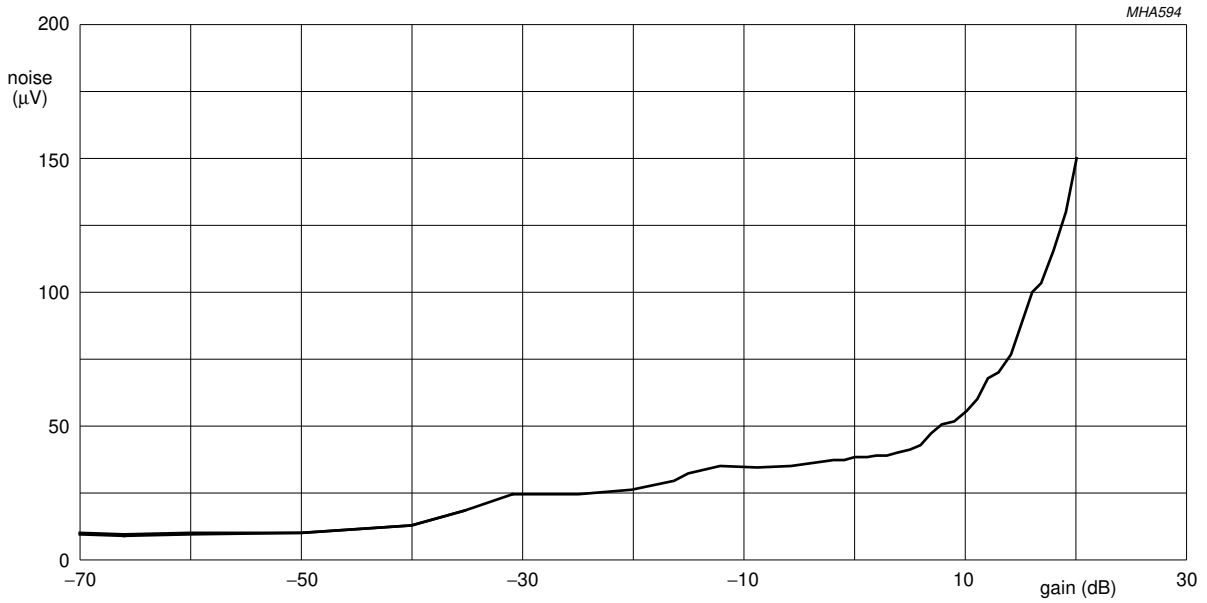

Stereo/mono inputs.

Fig.7 Noise output voltage; CCIR468-2, quasi peak.

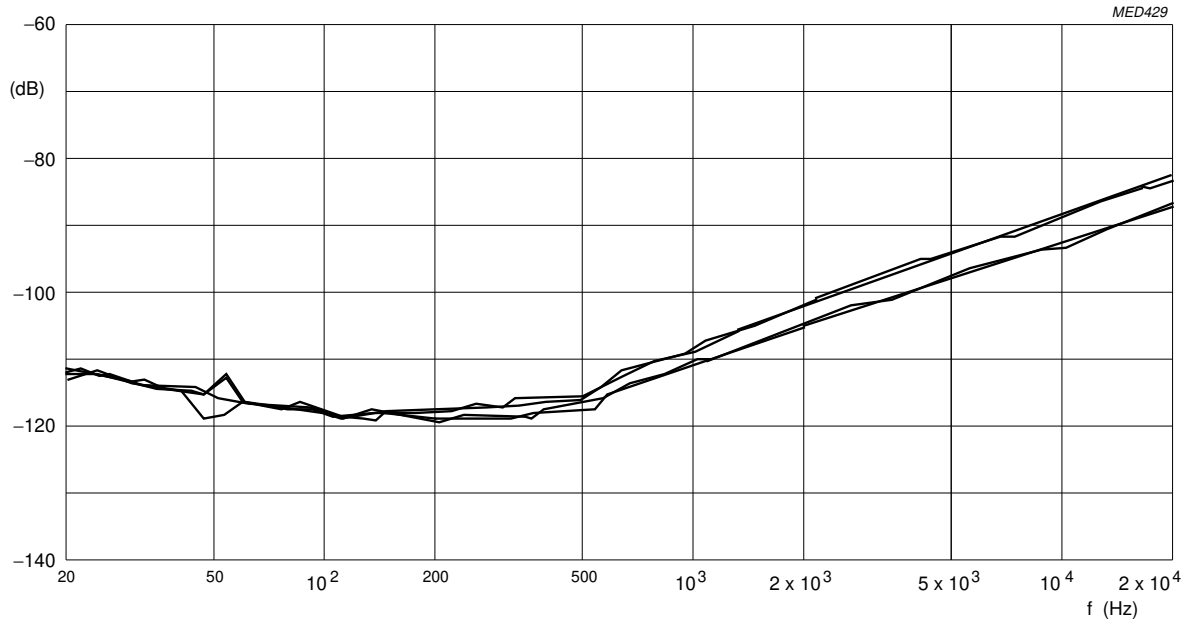

Fig.8 Muting.

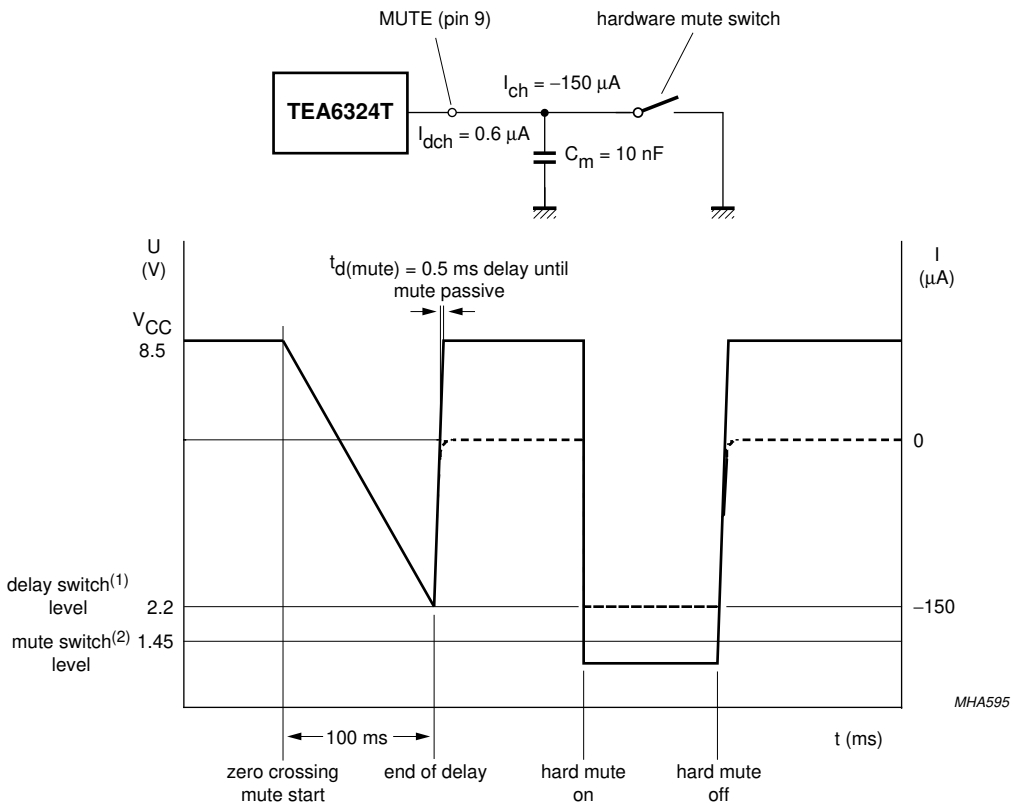

(1) Typically 2.2 V; referenced to $3 \times V_{BE}$.
(2) Typically 1.5 V; referenced to $2 \times V_{BE}$.

Fig.9 Mute function diagram.

In cases where at the maximum volume position the 20 dB gain is not needed, it is recommended that the maximum boost gain should be used. This coupled with increased attenuation in the last section (volume II), results in a lower noise and offset voltage.

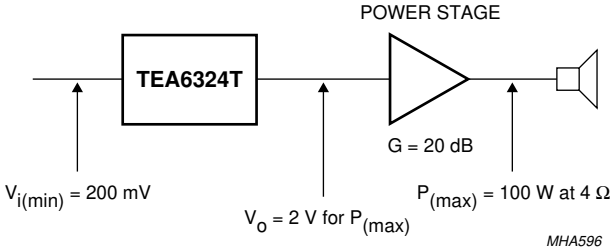

a.

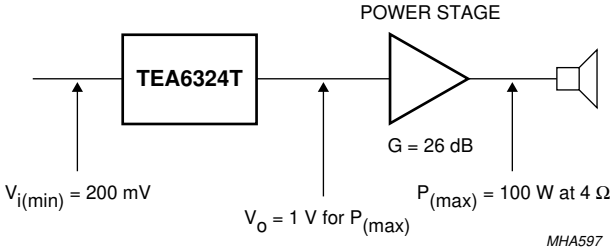

b.

a. Gain volume I = 20 dB ($G_{v(max)}$); gain volume II = 0 dB; control range = 55 dB.

b. Gain volume I = 20 dB ($G_{v(max)}$); gain volume II = −6 dB global setting; control range now 49 dB, previously 55 dB.

Fig.10 Level diagram.

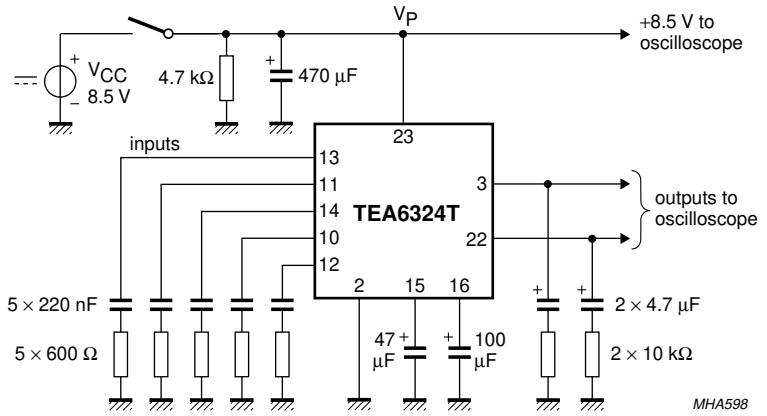

Fig.11 Turn-on/off power supply circuit diagram.

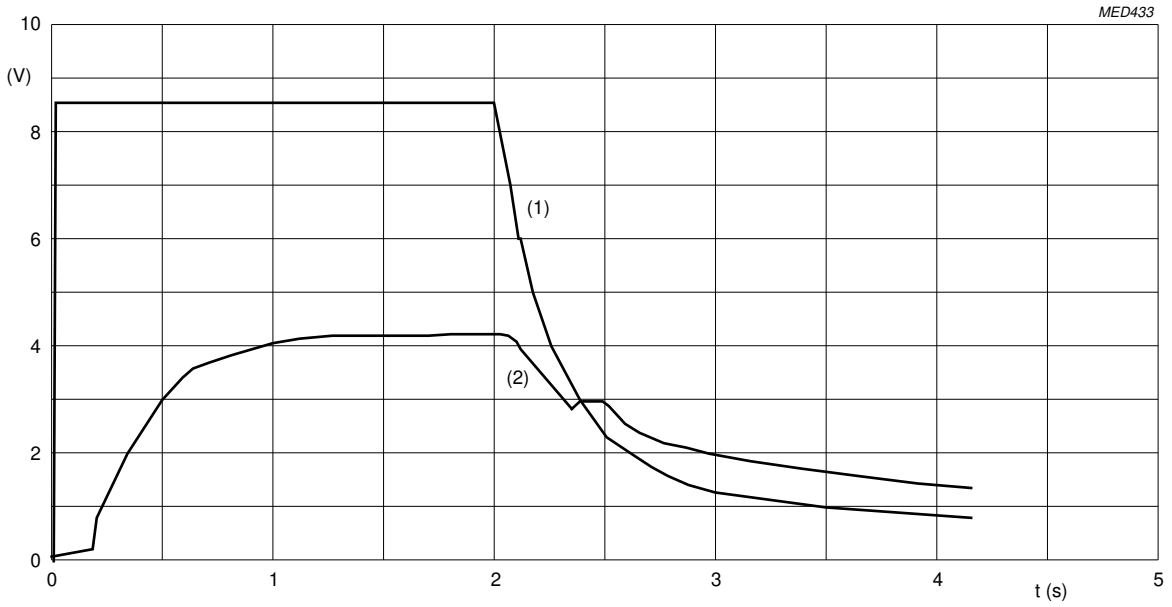

(1) V_{CC}.
(2) V_O.

Fig.12 Turn-on/off behaviour.