Chipsmall Limited consists of a professional team with an average of over 10 year of expertise in the distribution of electronic components. Based in Hongkong, we have already established firm and mutual-benefit business relationships with customers from,Europe,America and south Asia,supplying obsolete and hard-to-find components to meet their specific needs.

With the principle of “Quality Parts,Customers Priority,Honest Operation,and Considerate Service”,our business mainly focus on the distribution of electronic components. Line cards we deal with include Microchip,ALPS,ROHM,Xilinx,Pulse,ON,Everlight and Freescale. Main products comprise IC,Modules,Potentiometer,IC Socket,Relay,Connector.Our parts cover such applications as commercial,industrial, and automotives areas.

We are looking forward to setting up business relationship with you and hope to provide you with the best service and solution. Let us make a better world for our industry!

Contact us

Tel: +86-755-8981 8866 Fax: +86-755-8427 6832
Email & Skype: info@chipsmall.com Web: www.chipsmall.com
Address: A1208, Overseas Decoration Building, #122 Zhenhua RD., Futian, Shenzhen, China

PART NUMBER	DESCRIPTION
TELS–H	25 DOUBLE ENTRY DOUBLE LOCKING HEADS ONLY
TELS–13	10–13.5 IN. OF CABLE STRAP WITH 10 HEADS
TELS–27	10–27 IN. OF CABLE STRAP WITH 10 HEADS

Revision level		Revision Record	Changed	Date	Approved	Date
part	drawing					
–	02	See ECN 010674	A.A.C.	03/13/07	K.A.C.	03/13/07

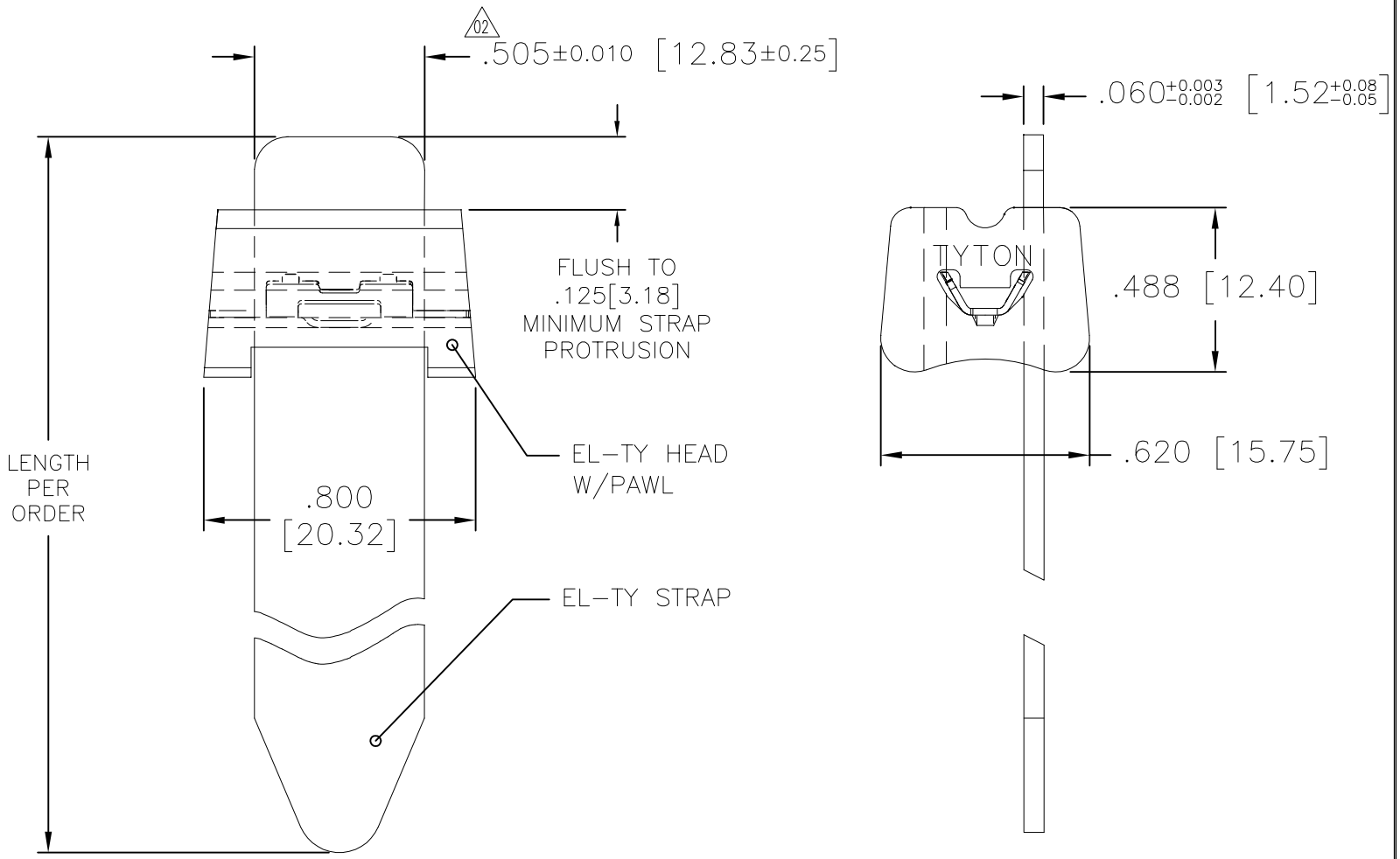

02 250lbs [1112 Newtons]

Min. Tensile Unlocking Strength

HEAD = ACETAL
PAWL = STEEL
STRAP = ACETAL

Material

Dimension tolerances unless otherwise specified
.XXXX =
.XXX = ± .005/[.127]
.XX = ± .02/[.51]
.X =
∠ = ± 2°

Dimension Units in / [mm]

PERFORMANCE SPECIFICATION

ACAD MECH 2007

Drawn	G.G.G.	4/18/94
Approved	K.A.C..	3/13/07

ALL PROPRIETARY RIGHTS IN THE SUBJECT MATTER SHOWN ON THIS DRAWING ARE EXCLUSIVE PROPERTY OF HELLERMANNTYTON

HellermannTyton®
7930 N. Faulkner Rd.
Milwaukee, WI 53224
Ph: (414) 355-1130
Fx: (414) 362-8338

Scale 2:1

Computer File Number CT\SER\1080303_01

Title

Phase: Production

EL-TY

Drawing–No

CT1080303SER

Format D. Size AH

Sheet 1 / 1