Chipsmall Limited consists of a professional team with an average of over 10 year of expertise in the distribution of electronic components. Based in Hongkong, we have already established firm and mutual-benefit business relationships with customers from,Europe,America and south Asia,supplying obsolete and hard-to-find components to meet their specific needs.

With the principle of “Quality Parts,Customers Priority,Honest Operation,and Considerate Service”,our business mainly focus on the distribution of electronic components. Line cards we deal with include Microchip,ALPS,ROHM,Xilinx,Pulse,ON,Everlight and Freescale. Main products comprise IC,Modules,Potentiometer,IC Socket,Relay,Connector.Our parts cover such applications as commercial,industrial, and automotives areas.

We are looking forward to setting up business relationship with you and hope to provide you with the best service and solution. Let us make a better world for our industry!

Contact us

Tel: +86-755-8981 8866 Fax: +86-755-8427 6832
Email & Skype: info@chipsmall.com Web: www.chipsmall.com
Address: A1208, Overseas Decoration Building, #122 Zhenhua RD., Futian, Shenzhen, China

THIS COPY IS PROVIDED ON A RESTRICTED BASIS AND IS NOT TO BE USED IN ANY WAY DETRIMENTAL TO THE INTERESTS OF PANDUIT CORP.

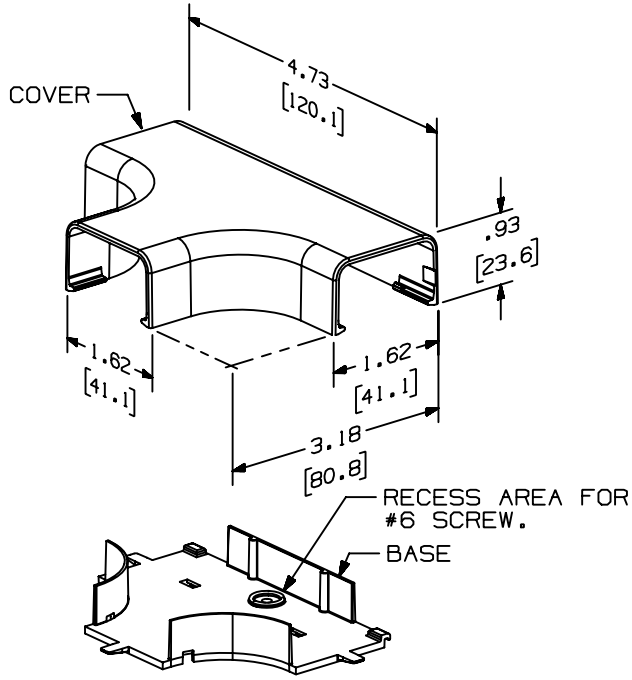

PANDUIT PART NO.	WEIGHT
TFX10	10.6 LB/100 PCS (4800 g/100 PCS)

NOTES:
1. SEE CURRENT CATALOG FOR ADDITIONAL PART NUMBER SUFFIXES TO INDICATE COLOR AND OR PACKAGE QUANTITY.
2. (A) THIS PRODUCT IS INTENDED TO BE USED WITH PANDUIT TYPE LD10, LDP10 AND LDP210 RACEWAY.
3. NOMINAL WALL THICKNESSES:
   BASE = .090 (2.3)
   COVER = .070 (1.8)
4. THIS PRODUCT IS FEATURED WITH THE TIA/EIA COMPLIANT BEND RADIUS.
5. DIMENSIONS IN PARENTHESIS ARE IN METRIC.

REV	DATE	BY	CHK	DESCRIPTION	ECN	CHK	CUST	SUP
1	03-11-04	JHEP	RGRO	A. REMOVED CD10 FROM NOTE 2	35013-07	RGRO	RGRO	
R	02-13-95	DW	CEF	RELEASED TO PRODUCTION	35013-07	CEF	CEF	

CAD FILENAME/LAYERS: D35013BG_LD_TFX10_01.PRT

PANDUIT CORP. TINLEY PARK, ILLINOIS

TEE FITTING BASE AND COVER
(TFX10)
CUSTOMER DRAWING

UNLESS OTHERWISE SPECIFIED, DIMENSIONAL TOLERANCES ARE:
(.X) ± (.XXX) ±.015 [.4]
(.XX) ±.03 [.8] ANGLES ±

UNLESS OTHERWISE SPECIFIED, ALL DIMENSIONS ARE GIVEN IN INCHES, THIRD ANGLE PROJECTION.

DRAWN BY: DW
DATE: 02-13-95
CHECKED BY: CEF
MAT'L: PVC
SCALE: NONE
DRAWING NO.: 35013-07
DWG SIZE: A