Chipsmall Limited consists of a professional team with an average of over 10 year of expertise in the distribution of electronic components. Based in Hongkong, we have already established firm and mutual-benefit business relationships with customers from,Europe,America and south Asia,supplying obsolete and hard-to-find components to meet their specific needs.

With the principle of “Quality Parts,Customers Priority,Honest Operation,and Considerate Service”,our business mainly focus on the distribution of electronic components. Line cards we deal with include Microchip,ALPS,ROHM,Xilinx,Pulse,ON,Everlight and Freescale. Main products comprise IC,Modules,Potentiometer,IC Socket,Relay,Connector.Our parts cover such applications as commercial,industrial, and automotives areas.

We are looking forward to setting up business relationship with you and hope to provide you with the best service and solution. Let us make a better world for our industry!

Contact us

Tel: +86-755-8981 8866 Fax: +86-755-8427 6832
Email & Skype: info@chipsmall.com Web: www.chipsmall.com
Address: A1208, Overseas Decoration Building, #122 Zhenhua RD., Futian, Shenzhen, China

SHEET OF

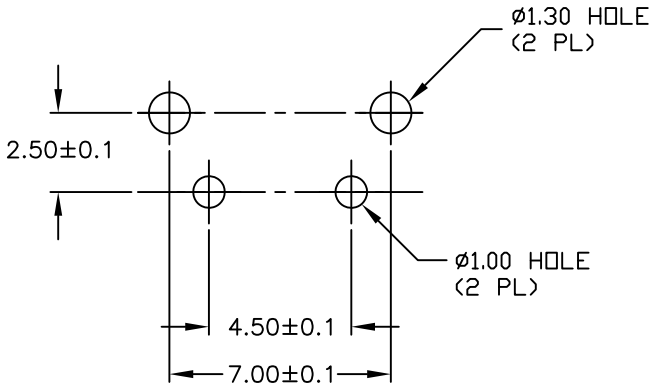

RECOMMENDED P.C.B. LAYOUT

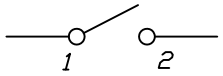

CIRCUIT: SPST

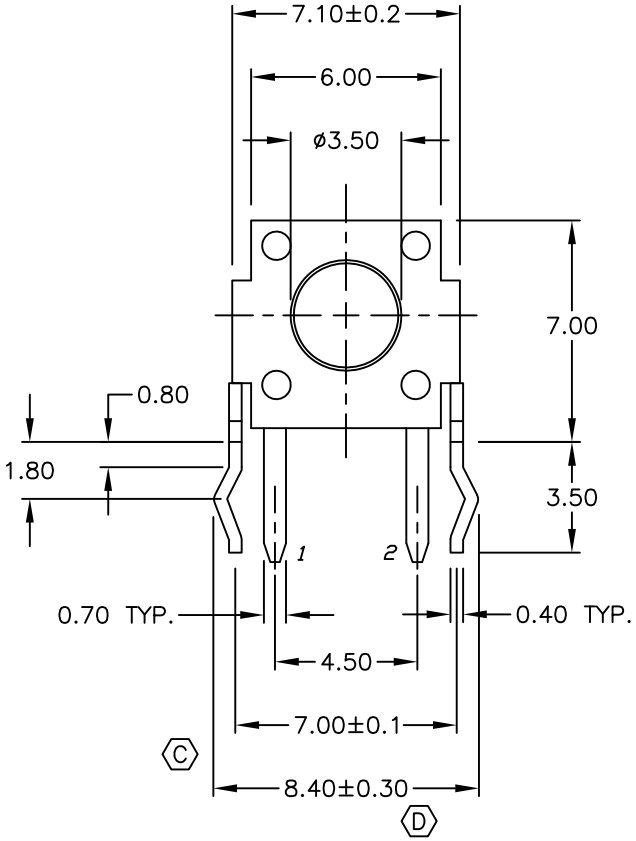

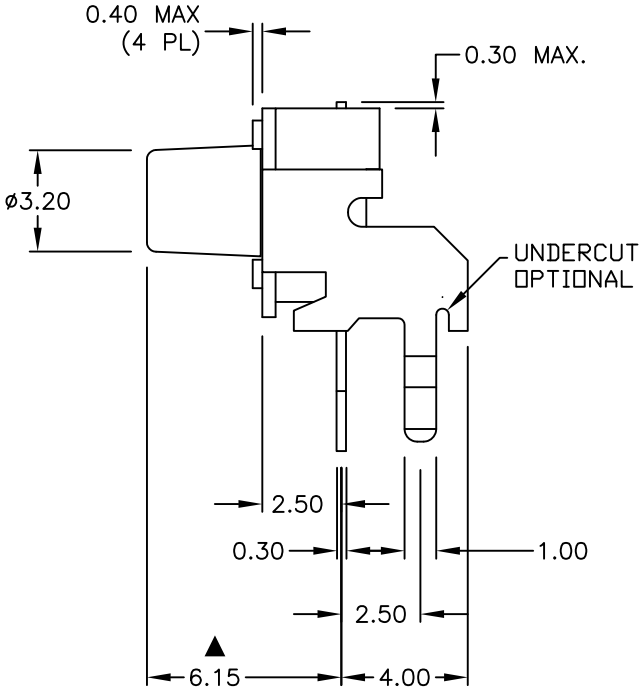

NOTES:

1. ALL DIMENSIONS IN MM
2. GENERAL TOLERANCE: X.X=±0.4
   X.XX=±0.25
3. TERM. NOS. FOR REF. ONLY
4. RATING: 50mA, @12V DC
5. TRAVEL: 0.25±0.1mm
6. ▲ OPERATING FORCE: 250±50gf
7. CONTACT RESISTANCE: 100 milliohms Max.
8. ELECTRICAL LIFE: 100,000 CYCLES MIN.
9. ▲ DESIGNATE MAJOR FEATURE
10. ▲ ACTUATOR COLOR: RED
11. HOUSING COLOR: BLACK

REV.	ECN No.	DESCRIPTION	DATE	CHKD
D	19502	ADD TOLERANCE	12/08/10	BGL
C	14400	REMOVE TOL. & ADD TO 7.00 DIM	10/13/04	AR
B	12370	REVISED AND REDRAWN	12/10/02	CJB

THE INFORMATION CONTAINED IN THIS DOCUMENT IS PROPRIETARY TO E-SWITCH AND IS NOT TO BE COPIED OR TRANSFERRED

E-SWITCH®

TITLE: TL1105RF250Q

SCALE	DATE	DR	DWG	REV
4:1	5/11/02	RJC	P021222	D